MANDÍK®

VARIABLE AIR VOLUME CONTROLLER SQUARE

RPMC-V

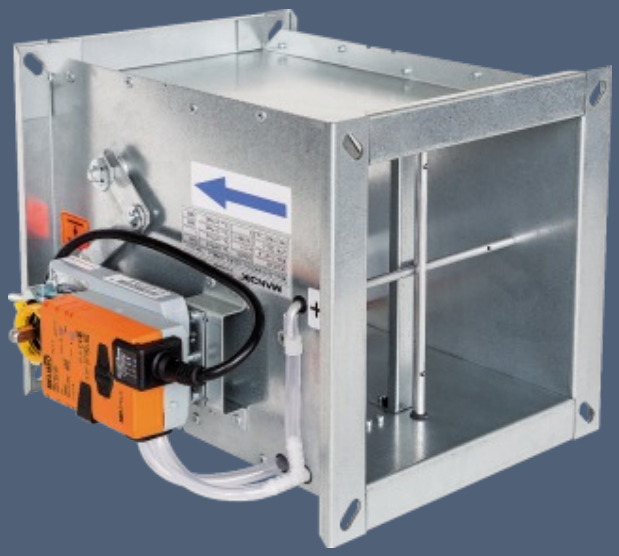

These technical specifications state a row of manufactured sizes and models of square constant air volume controller (further only controller) RPMC-V. It is valid for production, designing, ordering, delivery, assembly and operation.

I. CONTENT

II. GENERAL INFORMATION **3**

1. Description..... 3
2. Design..... 4
3. Dimensions, weights..... 17
4. Placement and Assembly..... 19

III. TECHNICAL DATA **20**

5. Basic parameters..... 20
6. Determination of actual air volume..... 22
7. Pressure loss..... 23
8. Noise data..... 23

IV. VENTILATION SYSTEMS **42**

9. Ventilation systems with controllers RPMC-V..... 42

V. MATERIAL, FINISHING **45**

10. Material..... 45

VI. INSPECTION, TESTING **45**

11. Inspection, testing..... 45

VII. TRANSPORTATION AND STORAGE **45**

12. Logistic terms..... 45

VIII. ASSEMBLY, ATTENDANCE, MAINTENANCE AND REVISIONS **46**

13. Assembly and set up..... 46

IX. ORDERING INFORMATION **47**

14. Ordering key..... 47

II. GENERAL INFORMATION

1. Description

1.1. The air volume controllers are meant for systems with a variable air volume that is used for input or output air. The required amount of air that is taken into the individual rooms or working areas is variable with respect to time and can be changed according to momentary need when the controllers are installed. Total power of air-conditioning system can be lower. This variable systems enable a more economical operation air-conditioning systems and while ensuring individual well-being on the premises setting.

The controller consists of the body of the controller with a control blades and pressure probes for determining the through-flow of air. An compact controller is affixed to the body for controlling the control blades.

Fig. 1 Controller RPMC-V (actuating Belimo)

Fig. 2 Controller RPMC-V MANDÍK PROFI-LINE (actuating Gruner)

1.2. Controller characteristics

- Type of regulation:
  - control of air flow
  - control of pressure in the duct
  - control of pressure in the room

● Nominal size	200x100 ÷ 1000x1000
● Length	L = 300 mm
● Tightness acc. to EN 1751	External casing leakage class C Internal leakage class 3
● Air flow volume	70 ÷ 26 000 m³/h (for 12m/s is max. Air flow vol. 43 000 m³/h*)
● Accuracy	± 8 % for velocity up to 3 m/s and ± 5 % for higher velocity.
● Air-velocity	Standard set-up is in range from min. 1 m/s to 7 m/s by Belimo, Gruner or Siemens actuators, see in 5.1.1.

1.3. Working conditions

The faultless functioning of the controllers is ensured under the following conditions:
a) maximum speed of air flow 7 m/s*
b) maximum pressure in the duct 1000 Pa
c) the air circulation in the whole controller section must be secured as steady on whole surface - see point 4.1.

Controllers are designed for macroclimatic areas with mild climate according to EN 60 721-3-3.

Controllers are suitable for systems without abrasive, chemical and adhesive particles.

Temperature in the place of installation is permitted to range from 0°C to +50°C.

The controllers are supplied without insulation or in an insulated design. Insulation thickness is 40 mm.

*** Set the controller to 12 m/s, it is necessary to discuss with the manufacturer!**

2. Design

Fig. 3 Air flow control

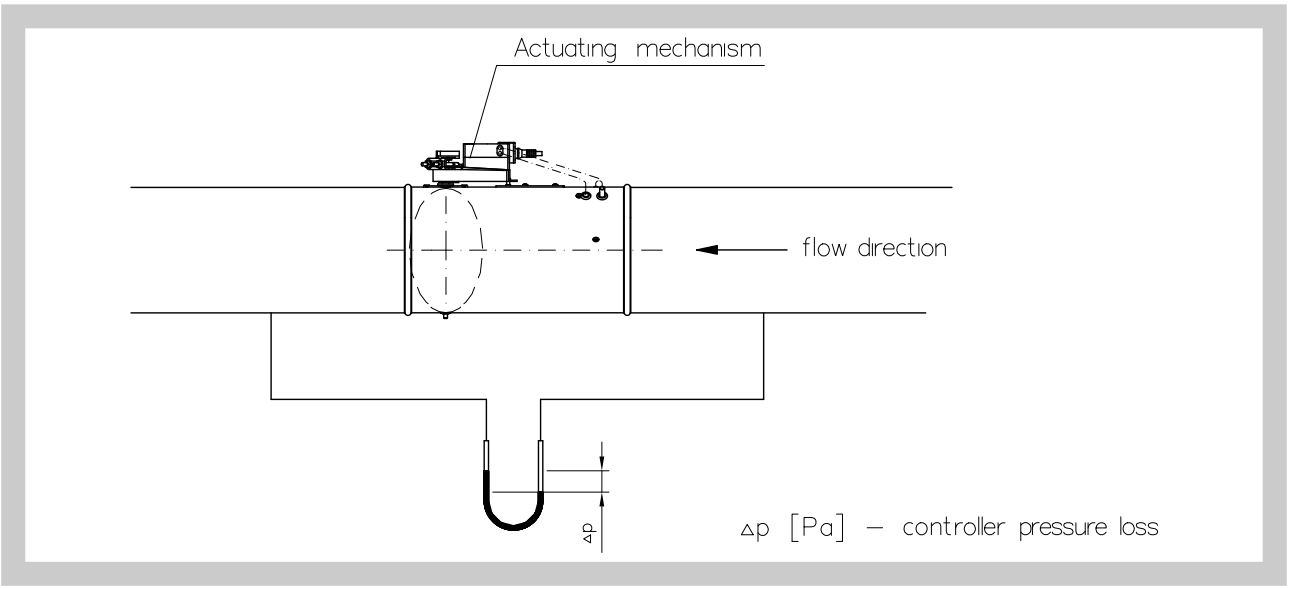

Fig. 4 Pipe pressure control

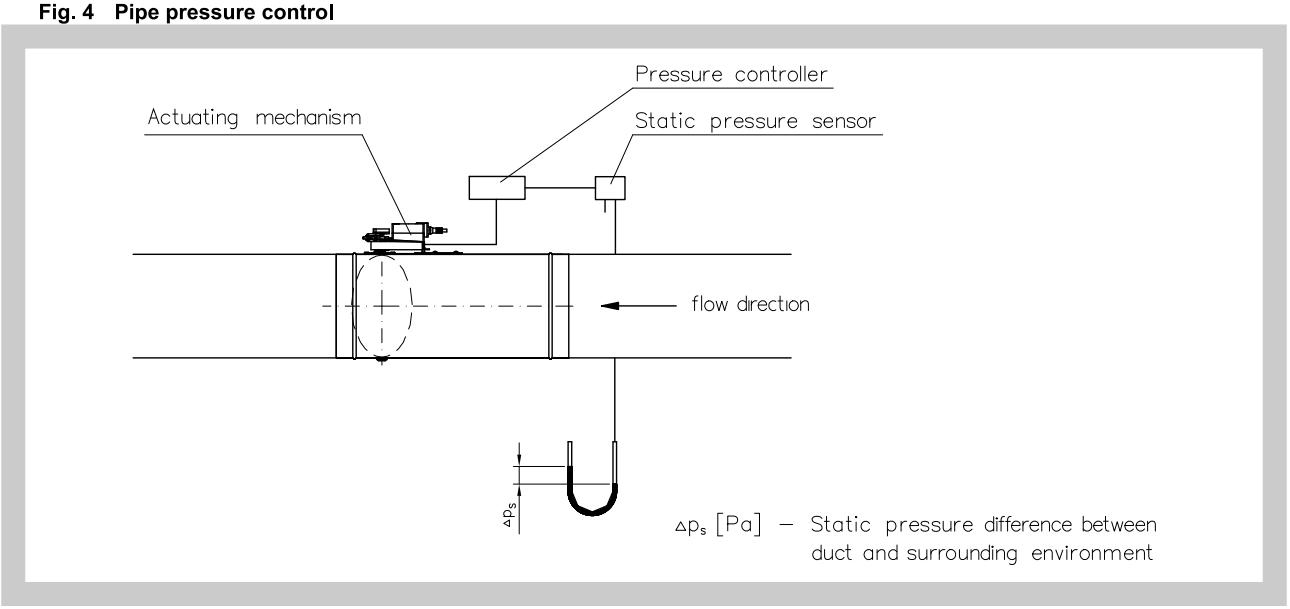

Fig. 5 Room pressure control

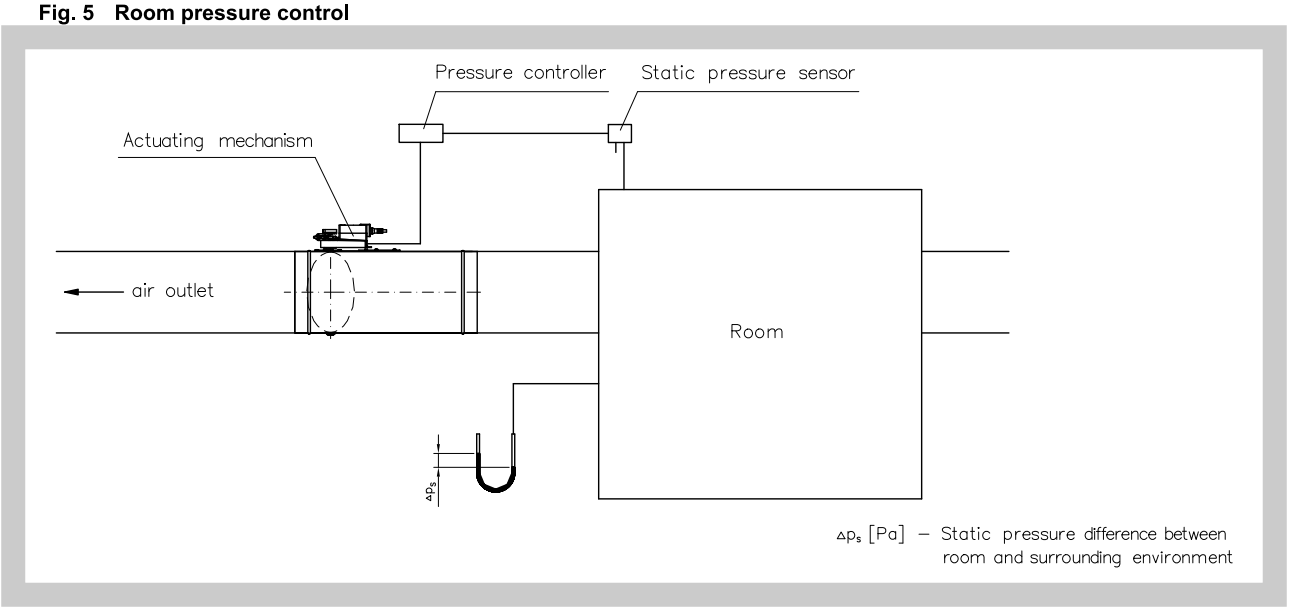

2.1. Compact regulator BELIMO - Air flow regulator

A pressure sensor, digital VAV controller and damper actuator all in one, providing a compact solution with a different communication possibilities.

The regulator is used for regulation of air flow, it works on the principle of dynamic measurement. It compares the measured differential pressure with the set point, in case of deviation it rotates the damper blade until the set point is reached.

Regulators are divided in accordance with the type of control:

- LMV-D3-MP, NMV-D3-MP and SMV-D3-MP for control with signal 0(2)…10 V or protocol MP-BUS
- LMV-D3-MOD and NMV-D3-MOD for control with signal 0(2)…10 V or using the protocol Modbus RTU, BACnet or MP-BUS
- LMV-D3-KNX and NMV-D3-KNX for control with signal 0(2)…10 V or using protocol KNX
- LMV-D3-LON and NMV-D3-LON for control with signal 0(2)…10 V or using protocol LON

Fig. 6 Regulator LMV-D3-MP, NMV-D3-MP and SMV-D3-MP

No.	Designation	Color of wire	Function
1	⊥ –	black	AC/DC 24 V
2	~ +	red	
3	Y	white	Control signal
4	U	orange	- Actual signal value - MP-BUS connection

Fig. 7 Air flow control with LMV-D3-MP, NMV-D3-MP and SMV-D3-MP

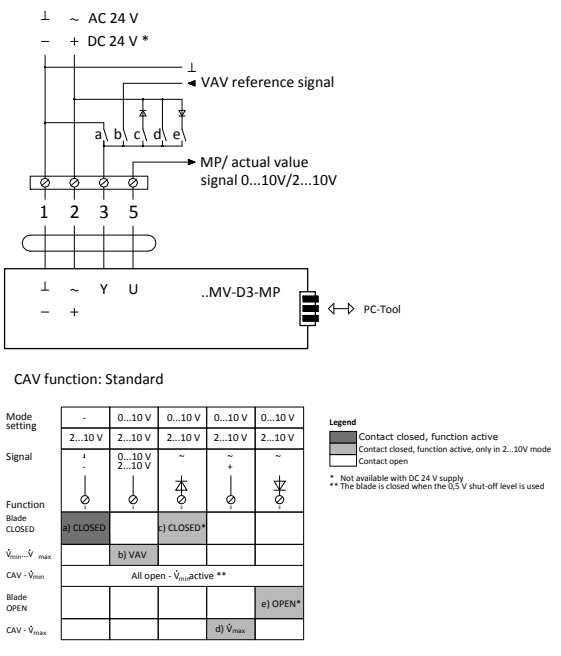

Fig. 8 Master-slave flow control with actuators LMV-D3-MP, NMV-D3-MP and SMV-D3-MP

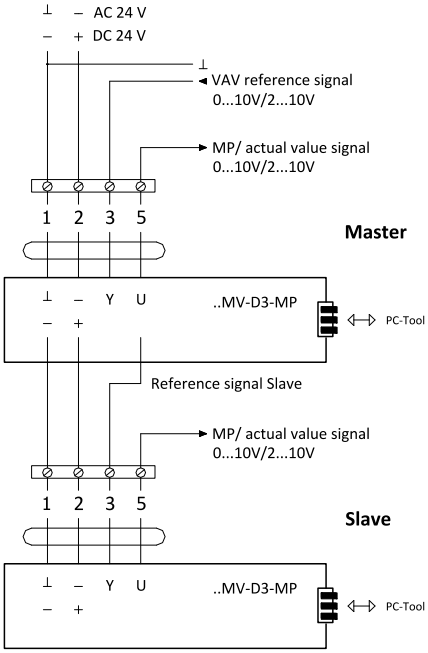

Fig. 9 Actuators LMV-D3-MOD, NMV-D3-MOD and SMV-D3-MOD

No.	Designation	Color of wire	Function
1	⊥ −	black	AC/DC 24 V
2	~ +	red	
3			
5	► MFT	orange	MP connection
6	D-	pink	BACnet/MODBUS connection (RS-485)
7	D+	grey	

Fig. 10 Wiring of LMV-D3-MOD, NMV-D3-MOD and SMV-D3-MOD on the serial line RS-485

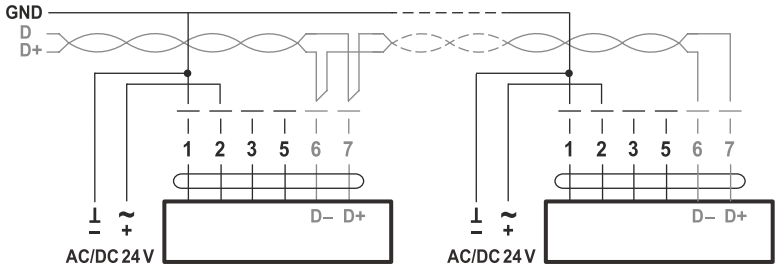

Fig. 11 Actuators LMV-D3-KNX, NMV-D3-KNX, LMV-D3-LON and NMV-D3-LON

No.	Designation	Color of wire	Function
1	⊥ −	black	AC/DC 24 V
2	~ +	red	
3			
5	► MFT	orange	PP connection
6	D+ / LON	pink	KNX / LON connection
7	D- / LON	grey	

Fig. 12 Wiring of actuators LMV-D3-KNX and NMV-D3-KNX

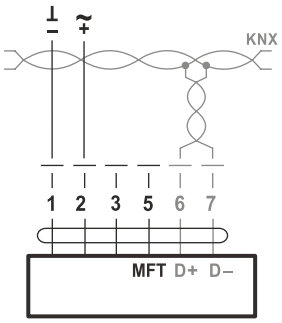

Fig. 13 Wiring of actuators LMV-D3-LON and NMV-D3-LON

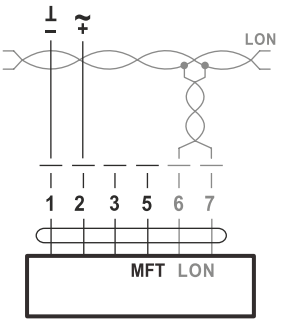

Tab. 2.1.1. Technical parameters of actuators LMV-D3-MP/MOD/KNX/LON, NMV-D3-MP/MOD/KNX/LON and SMV-D3-MP/MOD

VAV-Regulator	**LMV-D3-…**				**NMV-D3-…**				**SMV-D3-…**	
Communication	**MP**	**MOD**	**KNX**	**LON**	**MP**	**MOD**	**KNX**	**LON**	**MP**	**MOD**
Power voltage	AC/DC 24 V, 50/60 Hz									
Functional range	AC 19,2…28,8 V / DC 21,6…28,8 V									
Dimensioning	3,5 VA	4 VA		4,5 VA	5 VA			6,5 VA	5,5 VA	
	(max. 8 A @ 5 ms)									
Power input	2 W			2,5 W	3 W			4,5 W	3 W	
Torque	5 Nm				10 Nm				20 Nm	
Adjustment ranges										
$\dot{V}_{nom}$	OEM specific nominal volumetric flow setting, suitable for VAV unit									
$\dot{V}_{max}$	20…100% of $\dot{V}_{nom}$									
$\dot{V}_{min}$	0…100% of $\dot{V}_{nom}$									
Standard control										
VAV mode for reference value input Y (connection 3)	- DC 2…10 V/ (4…20mA resistance 500Ω) - DC 0…10 V/ (0…20mA resistance 500Ω) - adjustable DC 0…10 V } (Input impedance min. 100 kΩ)									
Mode for actual value signal U_5 (connection 5)	- DC 2…10 V - DC 0…10 V - adjustable: vol. flow, blade position or diff. pressure } (max. 0,5 mA)									
CAV operating modes (constant volumetric flow)	CLOSED / $\dot{V}_{min}$ / $\dot{V}_{max}$ / OPEN* (* only with AC 24V supply)									
Connection	cable 6 x 0,75 mm² (for MP communication cable 4 x 0,75 mm²)									
Protective category	III (Safety extra-low voltage)									
Ambient humidity	5 ... 95% r.h., non-condensing (in accordance with EN 60730-1)									
Non-operating temperature	-40°C…+80°C									
Weight	0,5 kg				0,7 kg				0,83 kg	

2.2. VRU regulator - regulation of air flow, pressure or pressure in the room

Universal VAV controller VRU and pressure sensor in one body (controlled by 0 / 2-10 V signal, MP-BUS, Modbus RTU, BACnet MS / TP) and actuator.

Depending on the type used, the controller works on the principle of dynamic or static measurement. It compares the measured differential pressure with the set value, in case of deviation it rotates the damper leaf until the set value is reached.

The regulators are divided according to the used pressure sensor:

- VRU-D3-BAC for control with 0/2…10V signal (optional MP-BUS, Modbus RTU, BACnet MS/TP), for measuring dynamic pressure in the range 0…500 Pa
- VRU-M1-BAC for control with 0/2…10V signal (optional MP-BUS, Modbus RTU, BACnet MS/TP), for measuring static pressure in the range 0…600 Pa
- VRU-M1R-BAC for control with 0/2…10V signal (optional MP-BUS, Modbus RTU, BAC net MS/TP), for measuring static pressure in the room in the range -75…+75 Pa

Further controllers are divided according to the type of actuator mechanism:

- LM24A-VST (5 N.m.), NM24A-VST (10 N.m.), SM24A-VST (20 N.m.) without return spring
- LF24-VST (4 N.m.), NF24A-VST (10 N.m.), SF24A-VST (20 N.m.) with return spring
- LMQ24A-VST (4 N.m.), NMQ24A-VST 8 N.m) fast drives
- NKQ24A-VST (10 N.m) quick-release drives with return spring

Fig. 14 Regulators VRU-D3-BAC, VRU-M1-BAC, VRU-M1R-BAC

No.	Designation	Function
1	⏚ -	AC/DC 24 V
2	~ +	
3	Y	VAV reference signal
5	U / MP	PP / MP communication
6	⏚	GND
7	D+	Control bus BACnet MS/TP / Modbus RTU
8	D-	

Tab. 2.2.1. Technical parameters of regulators VRU-D3-BAC, VRU-M1-BAC, VRU-M1R-BAC

Regulator	**VRU-D3-BAC**	**VRU-M1-BAC**	**VRU-M1R-BAC**
Power voltage	AC/DC 24 V, 50/60 Hz		
Functional range	AC 19.2...28.8 V / DC 21.6...28.8 V		
Dimensioning	2 VA (without actuator VST)		
Power input	1.5 W		
Control variable w1	DC 0/2...10 V @ input resistance 100 kΩ		
Working range	DC 2...10V		
Actual value signal U_5	0 (2)...10V		
Actuator connection	AC/DC 24V, PP-Link for VST- actuator		
Types of communication	PP Bus, MP Bus, ModBus RTU, BACnet		
Pressure sensor			
Measurement principle	Belimo D3 flow through sensor (dynamic measurement)	Belimo M1 membrane sensor	Belimo M1R membrane sensor
Mounting position	it is not position dependent, no reset is required		
Sensor range	0…500 Pa	0...600 Pa	-75...75 Pa
Maximum pressure	1500 Pa	1500 Pa	+-7kpa
Differential pressure	±1 Pa @ 0...20 Pa ±5% @ 20...500 Pa	–	–
Properties measured air	0...50°C / 5...95% r.H., non-condensing		
Pressure connection	hose ends for hose with inner 4… 6 mm		
Setting ranges			
Connection	screw terminals for 2 x 1,5 mm²		
Protection class	III (safe low voltage)		
Degree of protection	IP 42		
Ambient temperature	0...+50°C		
Storage temperature	-20°C...+80°C		
Paramaterization	Belimo Assisant App (NFC) / PC-Tool / ZTH EU		
Weight	0,34 kg (without actuator VST)		

Fig. 15 LM24A-VST, LMQ24A-VST, NM24A-VST, NMQ24A-VST, SM24A-VST

Fig. 16 NKQ24A-VST

Fig. 17 NF24A-VST, SF24A-VST

Tab. 2.2.2. Technical parameters of actuators LM24A-VST, NM24A-VST, SM24A-VST, LMQ24A-VST, NMQ24A-VST, NF24A-VST, SF24A-VST, NKQ24A-VST

Actuator	**LM24A-VST**	**NM24A-VST**	**SM24A-VST**	**LMQ24A-VST**	**NMQ24A-VST**	**NF24A-VST**	**SF24A-VST**	**NKQ24A-VST**
Power voltage	AC/DC 24 V, 50/60 Hz (z VRU)							
Power input / Dimensioning	1W / 2VA	2W / 4VA	2W / 4VA	13W / 23VA	13W / 23VA	5W / 8VA	8,5W / 11VA	11W / 22VA
Torque at rated voltage	5Nm	10Nm	20Nm	4Nm	8Nm	10Nm	20Nm	6Nm
Sense of rotation	L / R (switch optional)					L / R		L / R (switch optional)
Adjustment time for >90 (resp. 95°)	120s	120s	120s	2,5s	4s	120s return spring <20s	120s return spring <20s	4s return spring <4s
Degree of protection	IP 54							
Protection class	III (safe low voltage)							
Ambient temperature	-30°C...+50°C							
Storage temperature	-40°C...+80°C							
Noise level	35 dB(A)	35 dB(A)	45 dB(A)	54 dB(A)	56 dB(A)	40 dB(A)	40 dB(A)	60 dB(A)
Weight	0,56 kg	0,78 kg	0,98 kg	0,56 kg	0,78 kg	2,3 kg	2,3 kg	1,4 kg

2.3. PROFI-LINE regulator GRUNER - Air flow regulator / pressure regulator

A pressure sensor, digital VAV controller and damper actuator all in one, providing a compact solution with a different communication possibilities.

The regulator is used for regulation of air flow or pressure regulation (CCPC), it works on the principle of dynamic or static measurement.
It compares the measured differential pressure with the set point, in case of deviation it rotates the damper blade until the set point is reached.

Regulators based on the principle of dynamic measurement are divided in accordance with the type of control:

- 327VM-024-05(-MB), 327VM-024-10(-MB) or 327VM-024-15(-MB) for control with signal 0(2)…10 V, or 0(4)…20 mA, (optional Modbus), with range 0…500 Pa

Regulators based on the principle of static measurement are divided in accordance with the type of control and sensor range:

- 327VM-024-05-DS4(-MB), 327VM-024-10-DS4(-MB) or 327VM-024-15-DS4(-MB) for control with signal 0(2)…10 V or 0(4)…20 mA (optional Modbus), with range 0…400 Pa
- 327VM-024-05-DS6(-MB), 327VM-024-10-DS6(-MB) or 327VM-024-15-DS6(-MB) for control with signal 0(2)…10 V or 0(4)…20 mA (optional Modbus), with range 0…600 Pa
- 327VM-024-05-DS10(-MB), 327VM-024-10-DS10(-MB) or 327VM-024-15-DS10(-MB) for control with signal 0(2)…10 V or 0(4)…20 mA (optional Modbus), with range 0…1500 Pa

Note: Regulators marked at the end -MB, e.g. 327VM-024-05-MB or 327VM-024-05-DS4-MB, have the same functions as regulators without this designation, in addition they have the possibility of Modbus communication.

Fig. 18 Regulators 327VM-024-…

No.	Designation	Color of wire	Function
1	⊥ −	Black	AC/DC 24 V
2	~ +	Red	
3	Y	White	Control signal 0(2)…10 V
4	U	Orange	Signal output value

Fig. 19 Regulators 327VM-024-… -MB

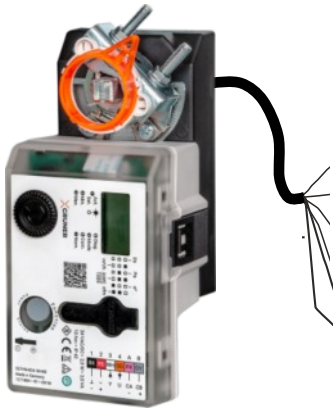

No.	Designation	Color of wire	Function
1	⊥ −	Black	AC/DC 24 V
2	~ +	Red	
3	Y	White	Control signal 0(2)…10 V
4	U	Orange	Signal output value
A	CA -	Pink	Modbus RTU (Connection RS-485)
B	CB +	Gray	

Fig. 20 Regulator 327VM-024-…

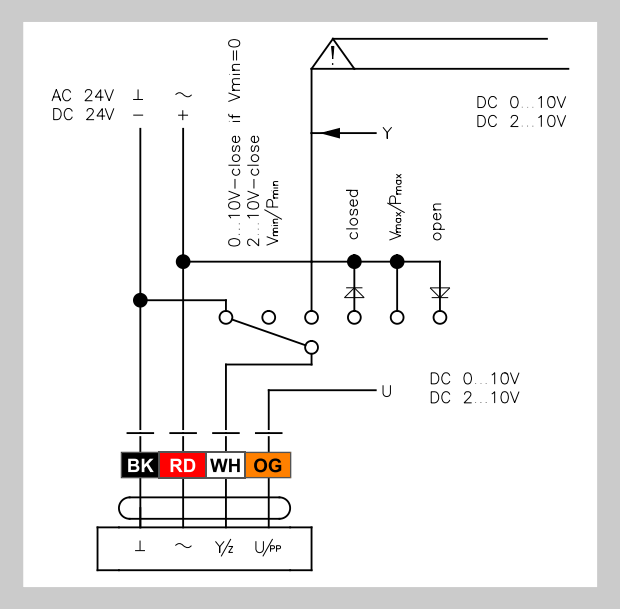

Fig. 21 Regulator 327VM-024-…-MB

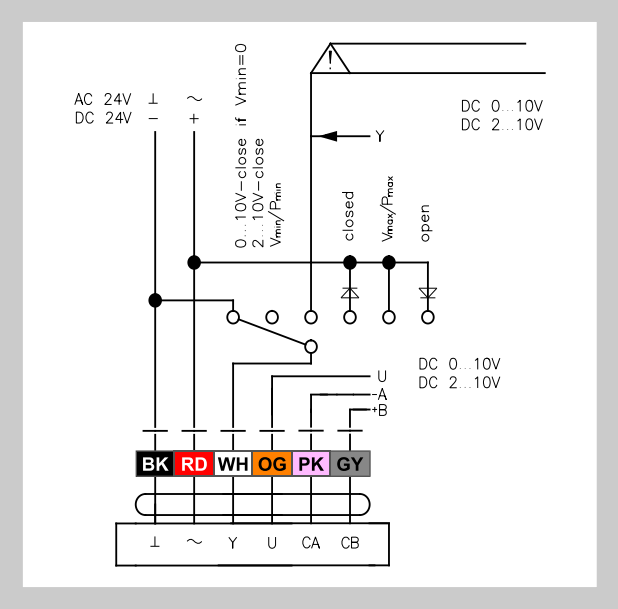

Tab. 2.3.1. Technical parameters of actuators 327VM-024-

Power voltage	AC/DC 24 V, 50/60 Hz
Nominal voltage	19...29 VAC/DC
Power input	< 3,0 W
Power input in a rest position	< 2,0 W
Torque	5|10|15 Nm
$\dot{V}_{nom}$	OEM specific nominal volumetric flow setting, suitable for VAV unit
$\dot{V}_{max}$	30…100% z $\dot{V}_{nom}$
$\dot{V}_{min}$	0…100% z $\dot{V}_{nom}$
Input signal Y	- DC 0(2)…10 V - DC 0(4)…20 mA
Output signal U	- DC 0(2)…10 V, max. 0,5 mA
Connection	cable 1m, 4 x 0,75 mm^2 (for regulators with Modbus 6 x 0,75 mm^2)
Protective category	III (Safety extra-low voltage)
Ambient humidity	5...95% rH, non-condensing(in accordance with EN 60730-1)
Ambient temperature	0…+50 °C
Storage temperature	-20…+80 °C
Noise level	< 35 dB

Note: Tab. 2.3.1. apply to controllers operating on the principle of both dynamic and static measurement, as well as air flow control (Chapter 2.3.)

2.4. Regulator GRUNER universal - Air flow regulator

GUAC controller and pressure sensor in one housing, plus separate actuator.

The regulator is used to control the air flow, in accordance with the connected sensor works on the principle of dynamic or static measurement.
It compares the measured differential pressure with the set point, in case of deviation it rotates the damper blade until the set point is reached.

Regulators are divided according to the type of pressure sensor and type of communication:

- GUAC-DM3(-MB) for control with signal 0(2)…10 V or 0(4)…20 mA (optional Modbus), for dynamic pressure measurement in the range 0…300 Pa
- GUAC-SM3(-MB) for control with signal 0(2)…10 V or 0(4)…20 mA (optional Modbus), for static pressure measurement in the range 0…300 Pa

Furthermore, the regulators are divided in accordance with the used actuator:

- 227C-024-05-V/ST06, 227C-024-10-V/ST06 and 227C-024-15-V/ST06 without return spring
- 341C-024-05-V/ST06, 361C-024-10-V/ST06 and 361C-024-15-V/ST06 with return spring

Fig. 22 Regulatory GUAC-…

No.	Designation	Color of wire	Function
1	⊥ −	blue	AC/DC 24 V
2	~ +	brown	
3	Y	black	Control signal 0(2)…10 V
4	U	grey	Signal output value

Fig. 23 Regulators GUAC-…

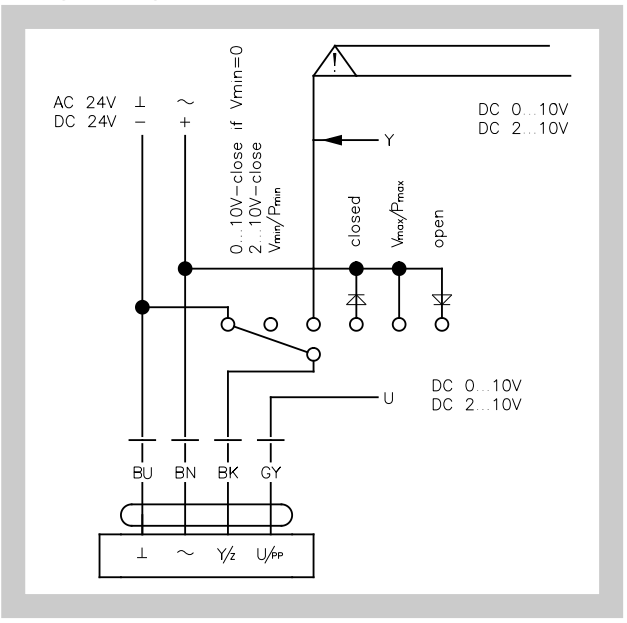

Fig. 24 Regulators GUAC-…-MB

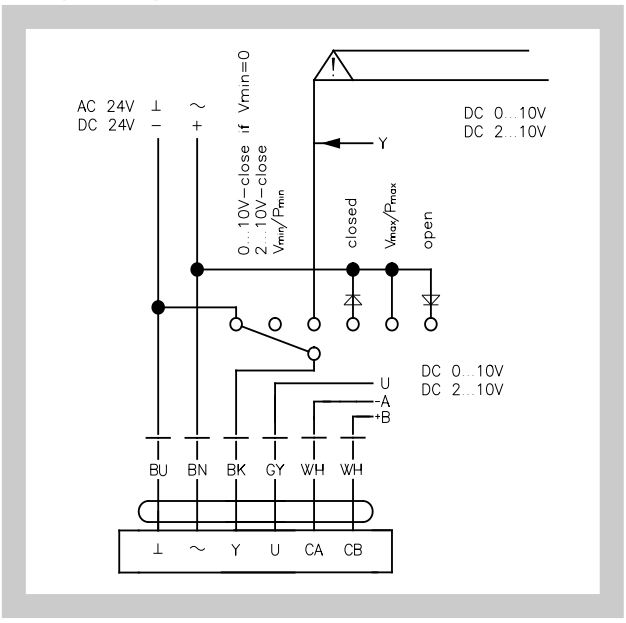

Tab. 2.4.1. Technical parameters of regulators GUAC-…

Regulator	GUAC-…
Power voltage	AC/DC 24 V, 50/60 Hz
Dimensioning	1,3 VA
Power input	0,6 W
$\mathring{V}_{nom}$	OEM specific nominal volumetric flow setting, suitable for VAV unit
$\mathring{V}_{max}$	0…100% z $\mathring{V}_{nom}$
$\mathring{V}_{min}$	0…100% z $\mathring{V}_{nom}$
Input signal Y	- DC 0(2)…10 V - DC 0(4)…20 mA
Output signal U	- DC 0(2)…10 V, max. 0,5 mA
Connection	cable 1m, Lumberg connector
Protective category	III (Safety extra-low voltage)
Ambient humidity	95% rH, non-condensing(in accordance with EN 60730-1)
Ambient temperature	0…+50 °C
Storage temperature	-20…+80 °C
Weight	0,38 kg

Fig. 25 Actuators 227C-024-…

Fig. 26 Actuators 341C-024-05-V/ST06 and 361C-024-…

Tab. 2.4.2. Technical parameters of actuators 227C-024-… , 341C-024-05-V/ST06 and 361C-024-…

Regulator	227C-024-05-V/ST06	227C-024-10-V/ST06	227C-024-15-V/ST06	341C-024-05-V/ST06	361C-024-10-V/ST06	361C-024-20-V/ST06
Power voltage	AC/DC 24 V, 50/60 Hz					
Dimensioning	3,5 VA			6,5 VA	8 VA	11,5 VA
Power input	2 W			5 W		8 W
Power input in a rest position	1 W			2 W		2 W
Torque	5 Nm	10 Nm	20 Nm	5 Nm	10 Nm	20 Nm
Connection	cable 1m, Lumberg connector					
Adjustment time for > 90°	< 100 s	< 150 s	< 150 s	< 100 s, return spring 20 s	< 150 s, return spring 20 s	< 150 s, return spring 20 s
Protective category	III (Safety extra-low voltage)					
Ambient humidity	95% rH, non-condensing (in accordance with EN 60730-1)					
Ambient temperature	-30…+50 °C					
Storage temperature	-30…+80 °C					
Noise level	< 35 dB					
Noise level of return spring	0			< 65 dB		
Weight	0,53 kg			1,4 kg	1,7 kg	

2.5. Regulator GRUNER universal - Pressure regulator

GUAC controller and pressure sensor in one housing, plus separate actuator.
The regulator is used for pressure regulation, in accordance with the connected sensor works on the principle of dynamic or static measurement.
It compares the measured differential pressure with the set point, in case of deviation it rotates the damper blade until the set point is reached.

Regulators are divided according to the type of pressure sensor and type of communication:

- GUAC-PM1(-MB) for control with signal 0(2)…10 V or 0(4)…20 mA (optional Modbus), for static pressure measurement in the range 0…100 Pa
- GUAC-PM3(-MB) for control with signal 0(2)…10 V or 0(4)…20 mA (optional Modbus), for static pressure measurement in the range 0…300 Pa
- GUAC-PM6(-MB) for control with signal 0(2)…10 V or 0(4)…20 mA (optional Modbus), for static pressure measurement in the range 0…600 Pa
- GUAC-DM3(-MB) for control with signal 0(2)…10 V or 0(4)…20 mA (optional Modbus), for dynamic pressure measurement in the range 0…300 Pa

Furthermore, the regulators are divided in accordance with the used actuator:

- 227C-024-05-V/ST06, 227C-024-10-V/ST06 and 227C-024-15-V/ST06 without return spring
- 341C-024-05-V/ST06, 361C-024-10-V/ST06 and 361C-024-15-V/ST06 with return spring

Similar to Chapter 2.4., and Tab. 2.4.1. and 2.4.2. apply to all these embodiments

2.6. Compact regulator Siemens - Air flow regulator

A pressure sensor, digital VAV controller and damper actuator all in one, providing a compact solution with a different communication possibilities.

The regulator is used for regulation of air flow, it works on the principle of dynamic measurement. It compares the measured differential pressure with the set point, in case of deviation it rotates the damper blade until the set point is reached.

Regulators are divided in accordance with the type of control:

- GDB181.1E/3 and GLB181.1E/3 for control with signal 0(2)…10 V
- GDB181.1E/BA and GLB181.1E/BA using the protocol BACnet
- GDB181.1E/KN and GLB181.1E/KN using the protocol KNX
- GDB181.1E/MO and GLB181.1E/MO using the protocol Modbus

Fig. 27 GDB181.1E/3 and GLB181.1E/3

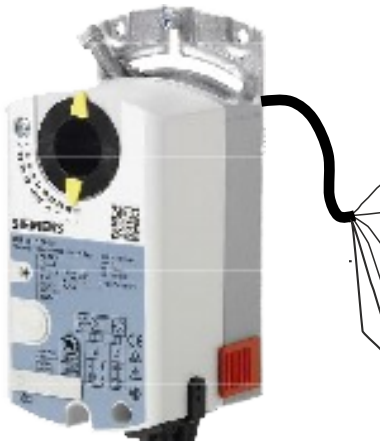

No.	Designation	Color of wire	Function
1	G	red	AC/DC 24 V
2	G0	black	
6	Y1	purple	Position signal of Actuator
7	Y2	orange	Position signal of Actuator
8	YC	grey	Control signal 0(2)…10 V
9	U	pink	Signal output value

Fig. 28 GDB181.1E/BA, GLB181.1E/BA, GDB181.1E/MO and GLB181.1E/MO

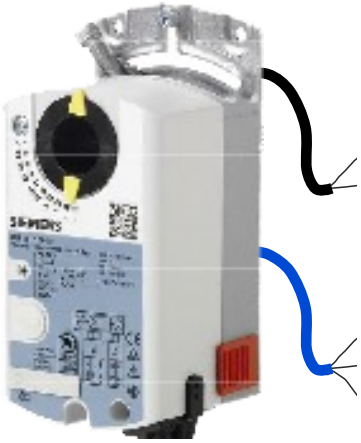

No.	Designation	Color of wire	Function
1	G	red	AC/DC 24 V
2	G0	black	

No.	Designation	Color of wire	Function
6	REF	purple	Reference
8	+	grey	Modbus RTU / BACnet
9	-	pink	Modbus RTU / BACnet

Fig. 29 GDB181.1E/KN and GLB181.1E/KN

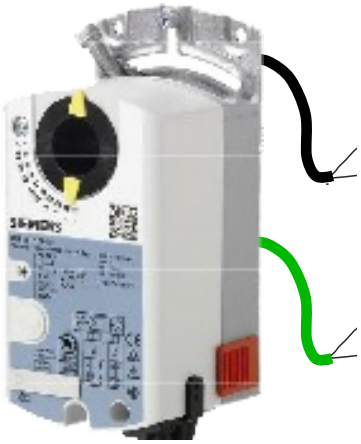

No.	Designation	Color of wire	Function
1	G	red	AC/DC 24 V
2	G0	black	

No.	Designation	Color of wire	Function
1	CE+	red	KNX
2	CE-	black	KNX

Tab. 2.6.1. Technical parameters of actuators **GDB181.1E/… and GLB181.1E/…**

VAV-Regulator	**GDB181.1E/…**				**GLB181.1E/…**			
Communication	**3** (without)	**MO**	**KN**	**BA**	**3 (bez)**	**MO**	**KN**	**BA**
Power voltage	AC 24 V, 50/60 Hz							
Functional range	+- 20%							
Dimensioning	3 VA							
Power input	2,5 W							
Torque	5 Nm				10 Nm			
Adjustment ranges								
$\mathring{V}_{nom}$	OEM specific nominal volumetric flow setting, suitable for VAV unit							
$\mathring{V}_{max}$	20…120% z $\mathring{V}_{nom}$							
$\mathring{V}_{min}$	-20…100% z $\mathring{V}_{nom}$							
Connection	cable 6 x 0,75 mm^2							
Protective category	III (Safety extra-low voltage)							
Ambient humidity	95% rH, non-condensing(in accordance with EN 60730-1)							
Storage temperature	-25…+70 °C							
Weight	0,6 kg							

3. Dimensions, weights

3.1. Dimensions, weights

Tab. 3.1.1. Main dimensions, weights and assignment of actuators

Size A x B	Weight [kg]		VAV-controller BELIMO / GRUNER / SIEMENS	Size A x B	Weight [kg]		VAV-controller BELIMO / GRUNER / SIEMENS
	Without insulation	With insulation			Without insulation	With insulation	
200 x 100	insulation	With	LMV-D3-xxx(LM24A-VST)/ 327VM-024-05/ GDB181-1E/xx	**700 x 200**	11,5	16,0	NMV-D3-xxx(NM24A-VST)/ 327VM-024-10/ GLB181-1E/xx
200 x 200	5,0	7,0	NMV-D3-xxx(NM24A-VST)/ 327VM-024-10/ GLB181-1E/xx	**700 x 300**	13,5	18,5	NMV-D3-xxx(NM24A-VST)/ 327VM-024-10/ GLB181-1E/xx
300 x 100	4,5	6,5	LMV-D3-xxx(LM24A-VST)/ 327VM-024-05/ GDB181-1E/xx	**700 x 400**	15,5	20,5	NMV-D3-xxx(NM24A-VST)/ 327VM-024-10/ -
300 x 200	5,5	8,5	NMV-D3-xxx(NM24A-VST)/ 327VM-024-10/ GLB181-1E/xx	**700 x 500**	18,0	23,5	SMV-D3-xxx(SM24A-VST)/ 327VM-024-15/ -
300 x 300	7,0	10,0	NMV-D3-xxx(NM24A-VST)/ 327VM-024-10/ GLB181-1E/xx	**800 x 200**	12,5	17,5	NMV-D3-xxx(NM24A-VST)/ 327VM-024-10/ -
400 x 100	5,0	7,5	LMV-D3-xxx(LM24A-VST)/ 327VM-024-05/ GDB181-1E/xx	**800 x 300**	15,0	20,0	NMV-D3-xxx(NM24A-VST)/ 327VM-024-10/ -
400 x 200	6,5	9,5	NMV-D3-xxx(NM24A-VST)/ 327VM-024-10/ GLB181-1E/xx	**800 x 400**	17,0	22,5	SMV-D3-xxx(SM24A-VST)/ 327VM-024-15/ -
400 x 300	8,0	11,5	NMV-D3-xxx(NM24A-VST)/ 327VM-024-10/ GLB181-1E/xx	**800 x 500**	19,5	25,5	SMV-D3-xxx(SM24A-VST)/ 327VM-024-15/ -
400 x 400	9,5	13,0	NMV-D3-xxx(NM24A-VST)/ 327VM-024-10/ GLB181-1E/xx	**800 x 600**	21,5	28,0	SMV-D3-xxx(SM24A-VST)/ GUAC-DM3+363C-024-20-VST/ -
500 x 100	6,0	9,0	NMV-D3-xxx(NM24A-VST)/ 327VM-024-10/ GDB181-1E/xx	**800 x 800**	26,0	33,0	SMV-D3-xxx(SM24A-VST)/ GUAC-DM3+363C-024-20-VST/ -
500 x 200	7,5	11,0	NMV-D3-xxx(NM24A-VST)/ 327VM-024-10/ GLB181-1E/xx	**900 x 300**	16,0	21,5	NMV-D3-xxx(NM24A-VST)/ 327VM-024-10/ -
500 x 300	9,0	13,0	NMV-D3-xxx(NM24A-VST)/ 327VM-024-10/ GLB181-1E/xx	**900 x 400**	18,5	24,5	SMV-D3-xxx(SM24A-VST)/ 327VM-024-15/ -
500 x 400	10,5	14,5	NMV-D3-xxx(NM24A-VST)/ 327VM-024-10/ GLB181-1E/xx	**900 x 500**	21,0	27,5	SMV-D3-xxx(SM24A-VST)/ GUAC-DM3+363C-024-20-VST/ -
500 x 500	12,0	16,5	SMV-D3-xxx(SM24A-VST)/ 327VM-024-15/ -	**1000 x 300**	17,5	23,5	NMV-D3-xxx(NM24A-VST)/ 327VM-024-10/ GLB181-1E/xx
600 x 100	6,5	10,0	NMV-D3-xxx(NM24A-VST)/ 327VM-024-10/ GDB181-1E/xx	**1000 x 400**	20,0	26,5	SMV-D3-xxx(SM24A-VST)/ 327VM-024-15/ -
600 x 200	8,5	12,5	NMV-D3-xxx(NM24A-VST)/ 327VM-024-10/ GLB181-1E/xx	**1000 x 500**	22,5	29,5	SMV-D3-xxx(SM24A-VST)/ GUAC-DM3+363C-024-20-VST/ -
600 x 300	10,0	14,5	NMV-D3-xxx(NM24A-VST)/ 327VM-024-10/ GLB181-1E/xx	**1000 x 600**	25,0	32,5	SMV-D3-xxx(SM24A-VST)/ GUAC-DM3+363C-024-20-VST/ -
600 x 400	11,5	16,5	NMV-D3-xxx(NM24A-VST)/ 327VM-024-10/ GLB181-1E/xx	**1000 x 800**	30,5	38,0	SMV-D3-xxx(SM24A-VST)/ GUAC-DM3+363C-024-20-VST/ -
600 x 500	13,5	18,5	SMV-D3-xxx(SM24A-VST)/ 327VM-024-15/ -	**1000 x 1000**	35,5	44,0	SMV-D3-xxx(SM24A-VST)/ GUAC-DM3+363C-024-20-VST/ -
600 x 600	15,0	20,5	SMV-D3-xxx(SM24A-VST)/ 327VM-024-15/ -				

By design for pressure control is to weight in Tab 3.1.1. add to weight of the VRU-xx-BAC controller (0.3 kg).

*** For sizes with actuator SMV-D3-xxx is controlling via LON not available.**

Fig. 30 RPMC-V

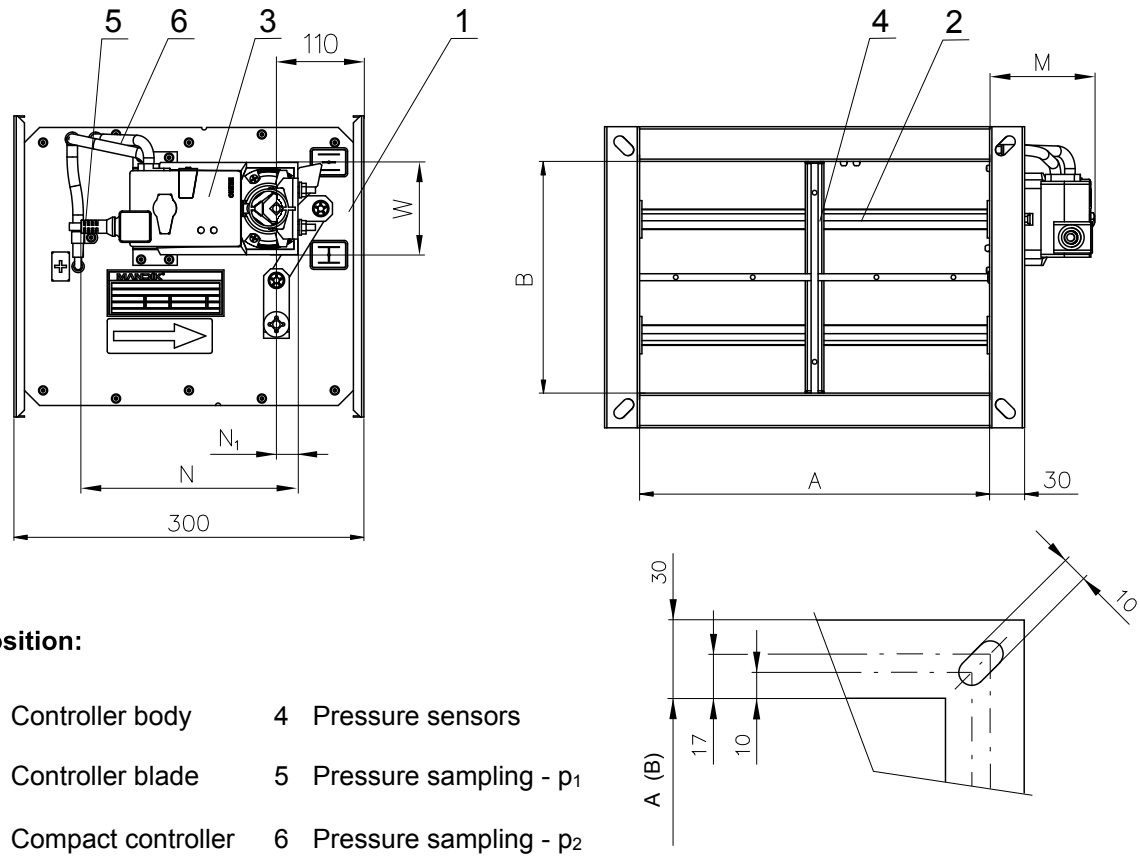

Position:

1	Controller body	4	Pressure sensors
2	Controller blade	5	Pressure sampling - p_1
3	Compact controller	6	Pressure sampling - p_2

Fig. 31 RPMC-V - with insulation

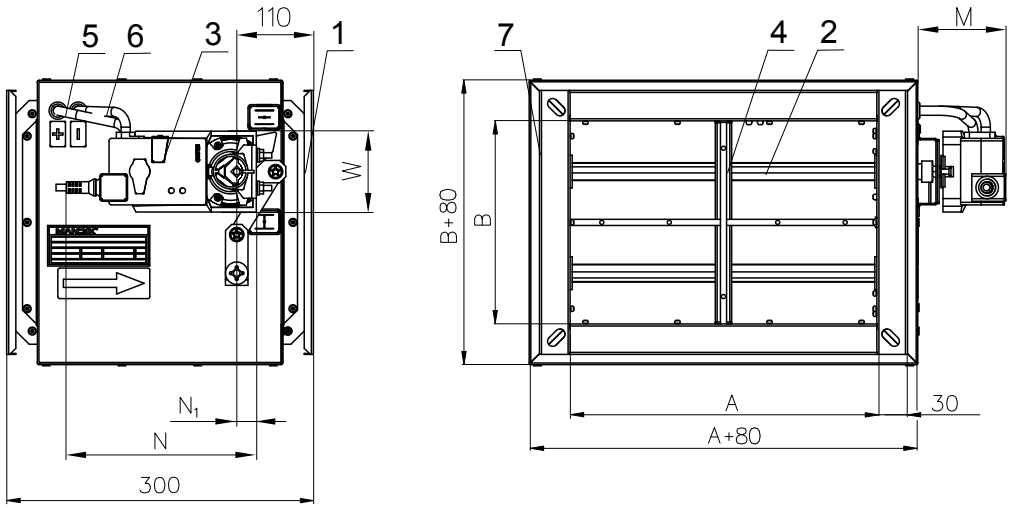

Position:

1	Controller body	4	Pressure sensors	7	Insulation cover
2	Controller blade	5	Pressure sampling - p_1		
3	Compact controller	6	Pressure sampling - p_2		

Tab. 3.1.2. Other dimensions

Size A x B	N [mm]	N_1 [mm]	W [mm]	M [mm]	Size A x B	N [mm]	N_1 [mm]	W [mm]	M [mm]
200 x 100	179/165	22/23	66/65	71/76	**700 x 200**	187/165	25/23	80/65	72/76
200 x 200	187/165	25/23	80/65	72/76	**700 x 300**	187/165	25/23	80/65	72/76
300 x 100	179/165	22/23	66/65	71/76	**700 x 400**	187/165	25/23	80/65	72/76
300 x 200	187/165	25/23	80/65	72/76	**700 x 500**	202/165	30/23	88/65	74/76
300 x 300	187/165	25/23	80/65	72/76	**800 x 200**	187/165	25/23	80/65	72/76
400 x 100	179/165	22/23	66/65	71/76	**800 x 300**	187/165	25/23	80/65	72/76
400 x 200	187/165	25/23	80/65	72/76	**800 x 400**	202/165	30/23	88/65	74/76
400 x 300	187/165	25/23	80/65	72/76	**800 x 500**	202/165	30/23	88/65	74/76
400 x 400	187/165	25/23	80/65	72/76	**800 x 600**	202/195*	30/29,6*	88/65*	74/96*
500 x 100	187/165	25/23	80/65	72/76	**800 x 800**	202/195*	30/29,6*	88/65*	74/96*
500 x 200	187/165	25/23	80/65	72/76	**900 x 300**	187/165	25/23	80/65	72/76
500 x 300	187/165	25/23	80/65	72/76	**900 x 400**	202/165	30/23	88/65	74/76
500 x 400	187/165	25/23	80/65	72/76	**900 x 500**	202/195*	30/29,6*	88/65*	74/96*
500 x 500	202/165	30/23	88/65	74/76	**1000 x 300**	187/165	25/23	80/65	72/76
600 x 100	187/165	25/23	80/65	72/76	**1000 x 400**	202/165	30/23	88/65	74/76
600 x 200	187/165	25/23	80/65	72/76	**1000 x 500**	202/195*	30/29,6*	88/65*	74/96*
600 x 300	187/165	25/23	80/65	72/76	**1000 x 600**	202/195*	30/29,6*	88/65*	74/96*
600 x 400	187/165	25/23	80/65	72/76	**1000 x 800**	202/195*	30/29,6*	88/65*	74/96*
600 x 500	202/165	30/23	88/65	74/76	**1000 x 1000**	202/195*	30/29,6*	88/65*	74/96*
600 x 600	202/165	30/23	88/65	74/76					

Values valid for Belimo / Gruner / Siemens actuators.

*** For this sizes is used actuator Gruner 363C-024-20-V with separate controller GUAC-DM3 with dimmensions 92x157x67 mm.**

4. Placement and Assembly

4.1. Controllers are designed for installation in air piping. Operating position is arbitrary. Necessary to keep the flow direction.

Fig. 32 Recommended distance from double branch joint

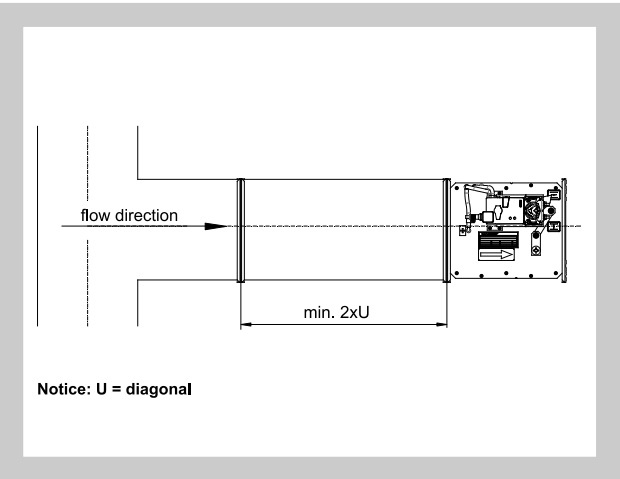

Fig. 33 Recommended distance from bend

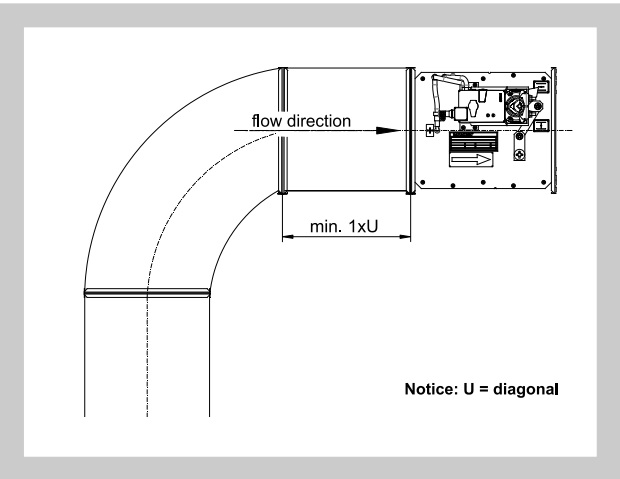

III. TECHNICAL DATA

5. Basic parameters

5.1. Air volume Belimo / Siemens

Tab. 5.1.1. Air volume Belimo / Siemens

Size A x B [mm]	Air volume [m³/h]					
	Standard values*			Maximum values		
	Minimal (w ≈ 1m/s)	Maximal (w ≈ 7m/s)	$\mathring{V}_{norm}$	Minimal (w ≈ 1m/s)	Maximal (w ≈ 12m/s)	$\mathring{V}_{norm}$
200 x 100	70	500	500	70	900	900
x 200	145	1000	1000	145	1800	1800
300 x 100	110	750	750	110	1300	1300
x 200	215	1500	1500	215	2600	2600
x 300	325	2300	2300	325	3900	3900
400 x 100	145	1000	1000	145	1800	1800
x 200	290	2000	2000	290	3500	3500
x 300	430	3100	3100	430	5200	5200
x 400	580	4100	4100	580	7000	7000
500 x 100	180	1250	1250	180	2200	2200
x 200	360	2500	2500	360	4400	4400
x 300	540	3800	3800	540	6500	6500
x 400	720	5100	5100	720	8700	8700
x 500	900	6400	6400	900	11000	11000
600 x 100	215	1500	1500	215	2600	2600
x 200	430	3100	3100	430	5200	5200
x 300	650	4600	4600	650	7800	7800
x 400	865	6200	6200	865	10500	10500
x 500	1080	7700	7700	1080	13000	13000
x 600	1300	9200	9200	1300	16000	16000
700 x 200	500	3600	3600	500	6000	6000
x 300	800	5400	5400	800	9000	9000
x 400	1000	7200	7200	1000	12000	12000
x 500	1250	9000	9000	1250	15000	15000
800 x 200	580	4100	4100	580	7000	7000
x 300	870	6200	6200	870	10500	10500
x 400	1150	8200	8200	1150	14000	14000
x 500	1450	10500	10500	1450	17500	17500
x 600	1730	12500	12500	1730	21000	21000
x 800	2300	16500	16500	2300	28000	28000
900 x 300	980	6900	6900	980	12000	12000
x 400	1300	9200	9200	1300	16000	16000
x 500	1620	12000	12000	1620	20000	20000
1000 x 300	1080	7700	7700	1080	13000	13000
x 400	1440	10500	10500	1440	17500	17500
x 500	1800	13000	13000	1800	22000	22000
x 600	2160	15500	15500	2160	26000	26000
x 800	2880	21000	21000	2880	35000	35000
x 1000	3600	26000	26000	3600	43000	43000

*** Default controller settings**

5.2. Air volume Gruner

Tab. 5.2.1. Air volume Gruner

Size A x B [mm]	Air volume [m³/h]					
	Standard values*			Maximum values		
	Minimal (w ≈ 1m/s)	Maximal (w ≈ 7m/s)	$\dot{V}_{norm}$	Minimal (w ≈ 1m/s)	Maximal (w ≈ 12m/s)	$\dot{V}_{norm}$
200 x 100	70	500	500	70	900	900
x 200	145	1000	1000	145	1800	1800
300 x 100	110	750	750	110	1300	1300
x 200	215	1500	1500	215	2600	2600
x 300	325	2300	2300	325	3900	3900
400 x 100	145	1000	1000	145	1800	1800
x 200	290	2000	2000	290	3500	3500
x 300	430	3100	3100	430	5200	5200
x 400	580	4100	4100	580	7000	7000
500 x 100	180	1250	1250	180	2200	2200
x 200	360	2500	2500	360	4400	4400
x 300	540	3800	3800	540	6500	6500
x 400	720	5100	5100	720	8700	8700
x 500	900	6400	6400	900	11000	11000
600 x 100	215	1500	1500	215	2600	2600
x 200	430	3100	3100	430	5200	5200
x 300	650	4600	4600	650	7800	7800
x 400	865	6200	6200	865	10500	10500
x 500	1080	7700	7700	1080	13000	13000
x 600	1300	9200	9200	1300	16000	16000
700 x 200	500	3600	3600	500	6000	6000
x 300	800	5400	5400	800	9000	9000
x 400	1000	7200	7200	1000	12000	12000
x 500	1250	8800	8800	1250	15000	15000
800 x 200	580	4100	4100	580	7000	7000
x 300	870	6200	6200	870	10500	10500
x 400	1150	8200	8200	1150	14000	14000
x 500	1450	10500	10500	1450	17500	17500
x 600	1730	12000	12000	1730	21000	21000
x 800	2300	16000	16000	2300	28000	28000
900 x 300	980	6900	6900	980	12000	12000
x 400	1300	9200	9200	1300	16000	16000
x 500	1620	11500	11500	1620	20000	20000
1000 x 300	1080	7700	7700	1080	13000	13000
x 400	1440	10500	10500	1440	17500	17500
x 500	1800	12500	12500	1800	22000	22000
x 600	2160	15100	15100	2160	26000	26000
x 800	2880	20200	20200	2880	35000	35000
x 1000	3600	25200	25200	3600	43000	43000

*** Default controller settings**

6. Determination of actual air volume

6.1. Air volume value is determined by means of the computation from the measured value U_5.

Sample for the operating mode 2...10 V

$$\dot{V} = \frac{U_5 - 2{,}0}{8} \cdot \dot{V}_{nom}$$

Sample for the operating mode 0...10 V

$$\dot{V} = \frac{U_5 \cdot \dot{V}_{nom}}{10}$$

Fig. 34 Determination of the actual value of U_5 by means of a voltage meter

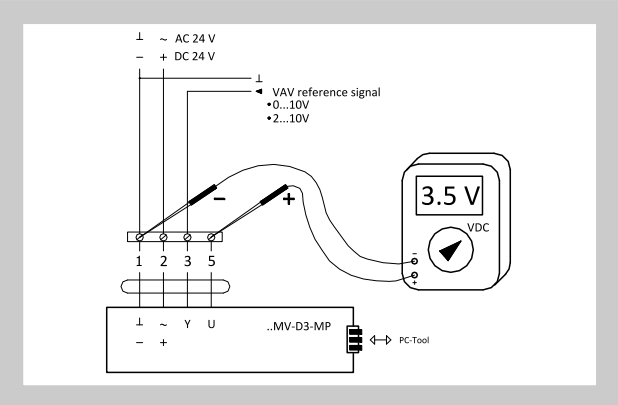

Example: Operating mode 0…10 V

Searched for: actual air volume
Voltage measured on U_5 : 3,5 V
$\dot{V}_{nom}$ = 6400 m³.h⁻¹

$$\dot{V} = \frac{3{,}5 \cdot 6400}{10} = 2240$$

Actual air volume is 2240 $m^3.h^{-1}$.

Example: Operating mode 2…10 V

Searched for: actual air volume
Voltage measured on U_5: 3,5 V
$\dot{V}_{nom}$ = 6400 $m^3.h^{-1}$

$$\dot{V} = \frac{3{,}5 - 2{,}0}{8} \cdot 6400 = 1200$$

Actual air volume is 1200 $m^3.h^{-1}$.

7. Pressure loss

Diagram 7.1.1. Pressure losses for air density ρ =1,2 kg.m^{-3}

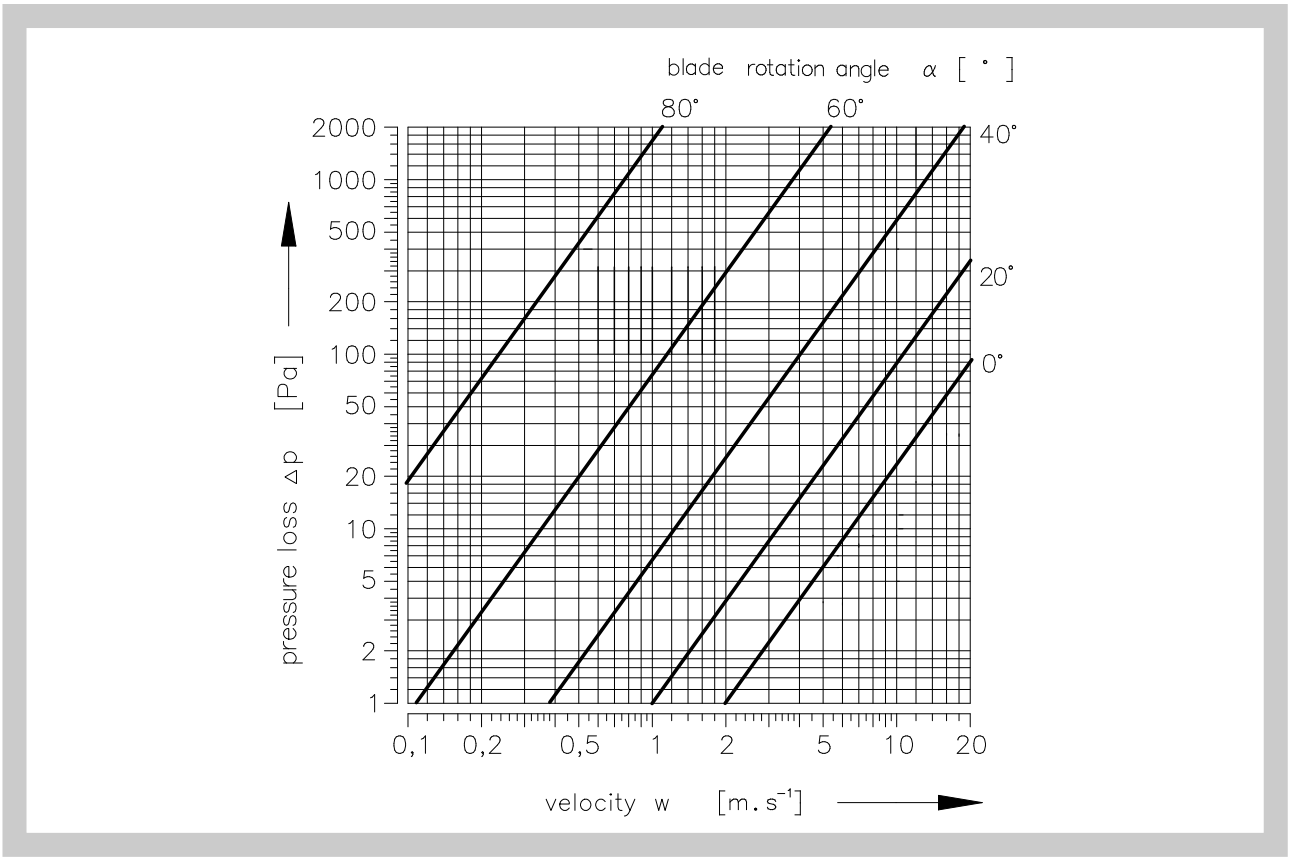

8. Noise data

8.1. Air-generated noise

The noise arising due to the flow of air volume controller is listed in the following tables Tab. 8.1.1. - 8.1.4.

$\mathring{V}$	[m³/h]	- air flow volume	L_{WA}	[dB(A)]	- total level of acoustic power corrected by filter A
Δp_{st}	[Pa]	- pressure difference			
L_W	[dB/Okt.]	- spectrum of acoustic output in octave range	f_m	[Hz]	- mean frequencies in the octave bands

Tab. 8.1.1.

Δp_{st} = 50 Pa											
Size		$\dot{V}$ [m³/h]	L_W [dB/Okt]								L_{WA} [dB(A)]
			f_m [Hz]								
			63	125	250	500	1000	2000	4000	8000	
200	x	100	90	44	43	39	39	39	40	43	37	47
			360	44	43	41	40	34	41	43	38	48
			630	45	47	48	47	47	45	47	39	52
			900	51	50	51	52	52	51	50	44	57
200	x	200	180	47	47	42	42	42	43	43	40	50
			720	46	45	43	42	41	43	43	40	50
			1260	46	48	49	48	48	46	46	40	53
			1800	51	50	51	52	52	51	51	43	57
300	x	100	130	44	43	39	39	39	40	40	38	47
			520	45	45	43	42	42	43	43	40	49
			910	45	47	48	47	47	45	45	40	52
			1300	50	49	50	51	51	50	50	43	56
300	x	200	260	46	45	41	41	42	42	42	39	49
			1040	46	45	44	43	43	44	44	41	50
			1820	48	50	51	50	50	48	48	42	58
			2600	52	51	52	53	53	52	52	44	58
300	x	300	390	46	45	41	41	41	42	42	39	49
			1560	46	45	43	42	41	43	43	40	49
			2730	47	49	50	49	51	47	47	41	54
			3900	53	52	53	54	54	53	53	45	59
400	x	100	180	45	44	40	40	40	41	41	38	48
			720	46	45	43	42	41	43	43	40	49
			1260	46	48	49	48	48	46	46	40	53
			1800	52	51	52	53	53	52	52	44	58
400	x	200	350	46	45	41	41	41	42	42	39	49
			1400	47	46	44	43	42	44	44	41	50
			2450	48	50	51	50	50	48	48	42	55
			3500	52	51	52	53	53	52	52	44	58
400	x	300	520	45	44	40	46	40	41	41	38	47
			2080	47	46	44	43	42	44	44	41	51
			3640	48	50	51	50	50	48	48	42	55
			5200	54	53	54	55	55	54	54	46	60
400	x	400	700	50	49	45	45	45	46	46	43	53
			2800	52	51	49	48	47	49	49	46	56
			4900	53	55	56	55	55	53	53	47	60
			7000	60	59	61	61	61	60	60	52	66
500	x	100	220	47	46	42	42	42	43	43	40	50
			880	47	46	44	43	42	44	44	51	51
			1540	47	49	60	49	49	47	47	41	54
			2200	52	51	52	53	53	52	52	44	58
500	x	200	440	45	44	41	41	41	42	42	39	48
			1760	47	46	44	43	42	44	44	41	51
			3080	48	50	51	50	50	48	48	42	55
			4400	54	53	54	55	55	54	54	46	60
500	x	300	650	54	44	40	40	40	41	41	38	48
			2600	46	45	43	42	42	43	43	40	50
			4550	47	48	48	47	47	47	47	42	53
			6500	54	53	53	53	53	53	53	47	59
500	x	400	870	46	45	42	41	41	42	42	39	49
			3480	47	46	44	43	42	44	44	41	51
			6090	47	49	50	49	49	47	47	41	54
			8700	55	54	55	56	56	55	55	47	61

Δp_{st} = 50 Pa										
Size	$\dot{V}$ [m³/h]	L_W [dB/Okt]								L_{WA} [dB(A)]
		f_m [Hz]								
		63	125	250	500	1000	2000	4000	8000	
500 x 500	1100	47	46	42	42	42	43	43	40	50
	4400	49	48	46	45	44	46	46	43	53
	7700	50	52	51	51	51	50	50	45	57
	11000	58	58	57	57	57	57	57	51	63
600 x 100	260	46	45	41	41	41	42	42	39	49
	1040	46	45	44	43	42	44	44	41	50
	1820	48	50	51	50	50	48	48	42	55
	2600	52	51	52	53	53	52	52	44	58
600 x 200	520	46	45	41	41	41	42	42	39	49
	2080	47	47	45	44	43	45	45	42	51
	3640	48	50	52	51	51	48	48	41	55
	5200	54	53	54	55	55	55	54	46	60
600 x 300	780	46	45	42	42	42	43	43	40	49
	3120	48	47	46	45	44	46	46	43	52
	5460	49	51	52	51	51	49	49	43	56
	7800	55	54	55	56	56	55	55	47	61
600 x 400	1050	46	45	41	41	41	42	42	39	49
	4200	48	47	45	44	43	45	45	42	52
	7350	48	50	51	50	50	48	48	43	55
	10500	55	54	55	56	56	55	55	47	61
600 x 500	1300	50	49	45	45	45	46	46	43	53
	5200	54	53	51	39	49	51	51	48	58
	9100	54	56	57	56	56	54	54	48	60
	13000	61	60	61	62	62	61	61	53	67
600 x 600	160	51	50	46	46	46	47	47	44	54
	5440	53	52	50	49	48	50	50	47	57
	10720	58	58	58	57	57	55	55	49	62
	16000	62	61	62	63	62	62	62	54	68
700 x 200	600	45	44	40	40	40	41	41	38	48
	2400	48	47	46	45	44	46	46	43	52
	4200	49	51	52	51	51	49	49	43	56
	6000	55	54	55	56	56	55	55	47	60
700 x 300	900	46	45	41	41	41	42	42	39	49
	3600	48	47	71	44	43	45	45	42	52
	6300	49	50	51	50	50	49	49	43	55
	9000	55	54	55	56	56	55	55	47	61
700 x 400	1200	46	45	41	41	40	42	42	39	49
	4800	49	48	47	46	44	47	47	44	53
	8400	49	51	52	51	51	49	49	44	56
	12000	57	56	57	58	58	57	57	49	62
700 x 500	1500	51	50	46	46	45	47	47	44	54
	6000	55	54	52	51	49	52	52	49	59
	10500	55	57	58	57	57	55	55	49	62
	15000	63	62	63	64	64	63	63	55	69
800 x 200	700	49	48	44	44	44	45	45	42	52
	2800	52	51	49	48	46	49	49	46	56
	4900	53	55	55	54	54	53	53	47	60
	7000	59	58	58	58	58	58	58	51	64
800 x 300	1050	46	45	41	41	41	42	42	39	49
	4200	48	48	46	45	43	46	46	43	52
	7350	48	50	52	51	50	48	48	42	55
	10500	55	54	55	56	56	56	56	46	61

Δ p_{st} = 50 Pa										
Size	$\dot{V}$ [m³/h]	L_W [dB/Okt]								L_{WA} [dB(A)]
		f_m [Hz]								
		63	125	250	500	1000	2000	4000	8000	
800 x 400	1400	46	45	41	41	40	42	42	39	49
	5600	49	48	46	45	43	46	46	43	53
	9800	50	52	53	52	52	50	50	45	57
	14000	57	56	57	58	57	57	57	49	63
800 x 500	1750	51	50	46	46	46	47	47	44	54
	7000	55	54	52	51	50	52	52	49	59
	12250	56	58	59	58	58	56	56	50	62
	17500	63	62	63	64	64	63	63	55	69
800 x 600	2100	51	50	47	47	47	48	48	45	54
	8400	56	55	53	52	51	53	53	50	60
	14700	56	58	59	58	58	56	56	50	63
	21000	64	63	64	65	65	64	64	56	70
800 x 800	2800	52	51	47	47	47	48	48	45	55
	11200	57	56	54	53	52	54	54	51	60
	19600	58	57	60	59	59	58	58	52	64
	28000	66	65	66	67	67	66	66	58	72
900 x 300	1200	51	50	46	46	46	47	47	44	54
	4800	54	53	51	50	49	51	51	48	58
	8400	55	57	57	57	57	55	55	49	61
	12000	61	60	61	62	62	61	61	53	67
900 x 400	1600	52	51	47	47	47	48	48	45	55
	6400	55	54	52	51	50	52	52	49	59
	11200	56	57	58	57	57	56	56	50	62
	16000	62	61	62	63	63	62	62	54	68
900 x 500	2000	52	51	47	47	47	48	48	45	55
	8000	56	55	53	52	51	53	53	50	60
	14000	57	58	59	58	58	57	57	51	63
	20000	64	63	64	65	65	64	64	56	70
1000 x 300	1300	51	50	46	46	46	47	47	44	54
	5200	54	53	51	50	49	51	51	48	58
	9100	54	56	57	56	56	54	54	48	61
	13000	62	61	62	63	63	62	62	54	68
1000 x 400	1750	52	51	47	47	47	48	48	45	55
	7000	54	53	51	50	49	51	51	48	58
	12250	56	58	59	58	58	56	56	50	63
	17500	63	62	63	64	64	63	63	55	69
1000 x 500	2200	50	49	45	45	45	46	46	43	53
	8800	56	55	53	52	51	53	53	50	60
	15400	57	59	60	59	59	57	57	51	63
	22000	64	63	64	65	65	64	64	56	70
1000 x 600	2600	53	52	48	48	48	49	49	46	56
	10400	57	56	54	53	52	54	54	51	60
	18200	57	59	60	59	59	57	57	51	63
	26000	65	64	65	66	66	65	65	57	71
1000 x 800	3500	54	53	49	49	49	50	50	47	57
	14000	58	57	55	54	53	55	55	52	61
	24500	59	60	61	60	60	59	59	53	65
	35000	67	66	67	68	68	67	67	59	73
1000 x 1000	4300	54	53	49	49	49	50	50	47	57
	17200	59	58	56	55	54	56	56	53	62
	30100	59	61	62	61	61	59	59	53	66
	43000	67	66	67	68	68	67	67	59	73

Tab. 8.1.2.

Δ p_{st} = 100 Pa										
Size	$\dot{V}$ [m³/h]	L_W [dB/Okt]								L_{WA} [dB(A)]
		f_m [Hz]								
		63	125	250	500	1000	2000	4000	8000	
200 x 100	90	48	47	43	43	43	44	47	41	51
	360	49	48	46	45	44	46	48	43	53
	630	50	52	53	52	52	50	52	44	57
	900	56	55	56	57	57	56	55	48	62
200 x 200	180	50	49	45	45	45	46	46	43	53
	720	51	50	48	47	46	48	48	45	55
	1260	51	53	54	53	53	51	51	45	58
	1800	56	55	56	57	57	56	56	48	62
300 x 100	130	49	48	44	44	44	45	45	42	52
	520	51	50	48	47	46	48	48	45	55
	910	51	53	54	53	53	51	51	45	58
	1300	56	55	56	57	57	56	56	48	62
300 x 200	260	50	49	45	45	45	46	46	43	53
	1040	52	51	49	48	47	49	49	46	56
	1820	53	55	56	55	55	53	53	47	60
	2600	57	56	57	58	58	57	57	49	63
300 x 300	390	50	49	45	45	45	46	46	43	53
	1560	51	50	48	47	46	48	48	45	55
	2730	52	54	55	54	54	52	52	46	59
	3900	58	57	58	59	59	58	58	50	64
400 x 100	180	49	48	44	44	44	45	45	42	52
	720	51	50	48	47	46	48	48	45	55
	1260	51	53	54	53	53	51	51	45	58
	1800	56	55	56	57	57	56	56	48	62
400 x 200	350	50	49	45	45	45	46	46	43	53
	1400	52	51	49	48	47	49	49	46	56
	2450	53	55	56	55	55	53	53	47	60
	3500	59	58	59	60	60	59	59	51	65
400 x 300	520	50	49	45	45	45	46	46	43	53
	2080	53	52	50	49	48	50	50	47	57
	3640	53	55	56	55	55	53	53	47	60
	5200	59	58	59	60	60	59	59	51	65
400 x 400	700	55	54	50	50	50	51	51	48	58
	2800	58	57	55	54	53	55	55	52	62
	4900	59	61	62	61	61	59	59	53	66
	7000	65	64	65	66	66	65	65	57	71
500 x 100	220	49	48	44	44	44	45	45	42	52
	880	51	50	48	47	46	48	48	45	55
	1540	51	53	54	53	53	51	51	45	58
	2200	56	55	56	57	57	56	56	48	62
500 x 200	440	49	48	44	44	44	45	45	42	52
	1760	52	51	49	48	47	49	49	46	56
	3080	53	55	56	55	55	53	53	47	60
	4400	59	58	59	60	60	59	59	51	65
500 x 300	650	49	48	44	44	44	45	45	42	52
	2600	52	51	49	48	47	49	49	46	56
	4550	52	54	55	54	54	52	52	46	59
	6500	59	58	59	60	60	59	59	51	65
500 x 400	870	51	50	46	46	46	47	47	44	54
	3480	53	52	50	49	48	50	50	47	57
	6090	53	55	56	55	55	53	53	47	60
	8700	60	59	60	61	61	60	60	52	66

Δp_{st} = 100 Pa										
Size	$\dot{V}$ [m³/h]	L_W [dB/Okt]								L_{WA} [dB(A)]
		f_m [Hz]								
		63	125	250	500	1000	2000	4000	8000	
500 x 500	1100	51	50	46	46	46	47	47	44	54
	4400	54	53	51	50	49	51	51	48	58
	7700	55	57	58	57	57	55	55	49	62
	11000	63	62	63	64	64	63	63	55	69
600 x 100	260	50	49	45	45	45	46	46	43	53
	1040	52	51	49	48	47	49	49	46	56
	1820	53	55	56	55	55	53	53	47	60
	2600	57	56	57	58	58	57	57	49	63
600 x 200	520	50	49	45	45	45	46	46	43	53
	2080	53	52	50	49	48	50	50	47	57
	3640	53	55	56	55	55	53	53	47	60
	5200	59	58	59	60	60	59	59	51	65
600 x 300	780	51	50	46	46	46	47	47	44	54
	3120	54	53	51	50	49	51	51	48	58
	5460	54	56	57	56	56	54	54	48	61
	7800	61	60	61	62	62	61	61	53	67
600 x 400	1050	51	50	46	46	46	47	47	44	54
	4200	54	53	51	50	49	51	51	48	58
	7350	54	56	57	56	56	54	54	48	61
	10500	61	60	61	62	62	61	61	53	67
600 x 500	1300	55	54	50	50	50	51	51	48	58
	5200	59	58	56	55	54	56	56	53	63
	9100	59	61	62	61	61	59	59	53	66
	13000	67	66	67	68	68	67	67	59	73
600 x 600	160	56	55	51	51	51	52	52	49	59
	5440	59	58	56	55	54	56	56	53	63
	10720	60	62	63	62	62	60	60	54	67
	16000	68	67	68	69	69	68	68	60	74
700 x 200	600	50	49	45	45	45	46	46	43	53
	2400	54	53	51	50	49	51	51	48	58
	4200	54	56	57	56	56	54	54	48	61
	6000	60	59	60	61	61	60	60	52	66
700 x 300	900	51	50	46	46	46	47	47	44	54
	3600	53	52	50	49	48	50	50	47	57
	6300	54	56	57	56	56	54	54	48	61
	9000	60	59	60	61	61	60	60	52	66
700 x 400	1200	51	50	46	46	46	47	47	44	54
	4800	55	54	52	51	50	52	52	49	59
	8400	55	57	58	57	57	55	55	49	62
	12000	62	61	62	63	63	62	62	54	68
700 x 500	1500	56	55	51	51	51	52	52	49	59
	6000	60	59	57	56	55	57	57	54	64
	10500	60	62	63	62	62	60	60	54	67
	15000	68	67	68	69	69	68	68	60	74
800 x 200	700	55	54	50	50	50	51	51	48	58
	2800	58	57	55	54	53	55	55	52	62
	4900	59	61	62	61	61	59	59	53	66
	7000	65	64	65	66	66	65	65	57	71
800 x 300	1050	51	50	46	46	46	47	47	44	54
	4200	54	53	51	50	49	51	51	48	58
	7350	54	56	57	56	56	54	54	48	61
	10500	61	60	61	62	62	61	61	53	67

Size	$\dot{V}$ [m³/h]	L_W [dB/Okt] f_m [Hz] 63	125	250	500	1000	2000	4000	8000	L_{WA} [dB(A)]
Δp_{st} = 100 Pa										
800 x 400	1400	51	50	46	46	46	47	47	44	54
	5600	55	54	52	51	50	52	52	49	59
	9800	55	57	58	57	57	55	55	49	62
	14000	63	62	63	64	64	63	63	55	69
800 x 500	1750	56	55	51	51	51	52	52	49	59
	7000	60	59	57	56	55	57	57	54	64
	12250	61	63	64	63	63	61	61	55	68
	17500	69	68	69	70	70	69	69	61	75
800 x 600	2100	57	56	52	52	52	53	53	50	60
	8400	61	60	58	57	56	58	58	55	65
	14700	62	64	65	64	64	62	62	56	69
	21000	70	69	70	71	71	70	70	62	76
800 x 800	2800	58	57	53	53	53	54	54	51	61
	11200	62	61	59	58	57	59	59	56	66
	19600	63	65	66	65	65	63	63	57	70
	28000	72	71	72	73	73	72	72	64	78
900 x 300	1200	56	55	51	51	51	52	52	49	59
	4800	59	58	56	55	54	56	56	53	63
	8400	60	62	63	62	62	60	60	54	67
	12000	67	66	67	68	68	67	67	59	73
900 x 400	1600	57	56	52	52	52	53	53	50	60
	6400	60	59	57	56	55	57	57	54	64
	11200	61	63	64	63	63	61	61	55	68
	16000	68	67	68	69	69	68	68	60	74
900 x 500	2000	57	56	52	52	52	53	53	50	60
	8000	61	60	58	57	56	58	58	55	65
	14000	62	64	65	64	64	62	62	56	69
	20000	70	69	70	71	71	70	70	62	76
1000 x 300	1300	56	55	51	51	51	52	52	49	59
	5200	59	58	56	55	54	56	56	53	63
	9100	59	61	62	61	61	59	59	53	66
	13000	67	66	67	68	68	67	67	59	73
1000 x 400	1750	57	56	52	52	52	53	53	50	60
	7000	60	59	57	56	55	57	57	54	64
	12250	61	63	64	63	63	61	61	55	68
	17500	69	68	69	70	70	69	69	61	75
1000 x 500	2200	57	56	52	52	52	53	53	50	60
	8800	61	60	58	57	56	58	58	55	65
	15400	62	64	65	64	64	62	62	56	69
	22000	70	69	70	71	71	70	70	62	76
1000 x 600	2600	58	57	53	53	53	54	54	51	61
	10400	62	61	59	58	57	59	59	56	66
	18200	62	64	65	64	64	62	62	56	69
	26000	71	70	71	72	72	71	71	63	77
1000 x 800	3500	59	58	54	54	54	55	55	52	62
	14000	63	62	60	59	58	60	60	57	67
	24500	64	66	67	66	66	64	64	58	71
	35000	73	72	73	74	74	73	73	65	79
1000 x 1000	4300	59	58	54	54	54	55	55	52	62
	17200	64	63	61	60	59	61	61	58	68
	30100	65	67	68	67	67	65	65	59	72
	43000	73	72	73	74	74	73	73	65	79

Tab. 8.1.3.

Δp_{st} = 250 Pa											
Size		$\dot{V}$ [m³/h]	L_W [dB/Okt]								L_{WA} [dB(A)]
			f_m [Hz]								
			63	125	250	500	1000	2000	4000	8000	
200	x	100	90	54	53	49	49	49	50	53	47	57
			360	58	57	55	54	53	55	57	52	62
			630	58	60	61	60	60	58	60	52	65
			900	65	64	65	66	66	65	64	57	71
200	x	200	180	58	57	53	53	53	54	54	51	61
			720	60	59	57	56	55	57	57	54	64
			1260	59	61	62	61	61	59	59	53	66
			1800	64	63	64	65	65	64	64	56	70
300	x	100	130	54	53	49	49	49	50	50	47	57
			520	58	57	55	54	53	55	55	52	62
			910	58	60	61	60	60	58	58	52	65
			1300	62	61	62	63	63	62	62	54	68
300	x	200	260	57	56	52	52	52	54	53	50	60
			1040	59	58	56	55	54	56	56	53	63
			1820	60	62	63	62	62	60	60	54	67
			2600	65	64	65	66	66	65	65	57	71
300	x	300	390	58	57	53	53	53	54	54	51	61
			1560	60	59	57	56	55	57	57	54	64
			2730	61	63	64	63	63	61	61	55	68
			3900	66	65	66	67	67	66	66	58	72
400	x	100	180	57	56	52	52	52	53	53	50	60
			720	59	58	56	55	54	56	56	53	63
			1260	59	61	62	61	61	59	59	53	66
			1800	66	65	66	67	67	66	66	58	72
400	x	200	350	58	57	53	53	53	54	54	51	61
			1400	60	59	57	56	55	57	57	54	64
			2450	61	63	64	63	63	61	61	55	68
			3500	65	64	65	66	66	65	65	57	71
400	x	300	520	58	57	53	53	53	54	54	51	61
			2080	61	60	58	57	56	58	58	55	65
			3640	62	64	65	64	64	62	62	56	69
			5200	67	66	67	68	68	67	67	59	73
400	x	400	700	59	58	54	54	54	55	55	52	62
			2800	62	61	59	58	57	59	59	56	66
			4900	62	64	65	64	64	62	62	56	69
			7000	68	67	68	69	69	68	68	60	74
500	x	100	220	57	56	52	52	52	53	53	50	60
			880	60	59	57	56	55	57	57	54	64
			1540	60	62	63	62	62	60	60	54	67
			2200	63	62	63	64	64	63	63	55	69
500	x	200	440	58	57	53	53	53	54	54	51	61
			1760	61	60	58	57	56	58	58	55	65
			3080	62	64	65	64	64	62	62	56	69
			4400	65	64	65	66	66	65	65	57	71
500	x	300	650	58	57	53	53	53	54	54	51	61
			2600	61	60	58	57	57	58	58	55	65
			4550	61	63	61	60	60	61	61	58	68
			6500	65	66	64	63	63	64	64	61	71
500	x	400	870	60	58	56	55	55	56	56	53	63
			3480	62	61	59	58	57	59	59	56	66
			6090	62	64	65	64	64	62	62	56	69
			8700	68	67	68	69	69	68	68	60	74

Δp_{st} = 250 Pa										
Size	$\dot{V}$ [m³/h]	L_W [dB/Okt]								L_{WA} [dB(A)]
		f_m [Hz]								
		63	125	250	500	1000	2000	4000	8000	
500 x 500	1100	64	63	59	59	59	60	60	57	67
	4400	66	66	62	62	62	63	63	60	70
	7700	66	69	65	65	65	66	66	63	73
	11000	71	73	69	69	69	70	70	67	77
600 x 100	260	57	56	52	52	52	53	53	50	60
	1040	59	58	56	55	54	56	56	53	63
	1820	60	62	63	62	62	60	60	54	67
	2600	64	63	64	65	65	64	64	56	70
600 x 200	520	59	58	54	54	54	55	55	52	62
	2080	61	60	58	57	56	58	58	55	65
	3640	62	64	65	64	64	62	62	56	69
	5200	66	65	66	67	67	66	66	58	72
600 x 300	780	59	58	54	54	54	55	55	52	62
	3120	62	61	59	58	57	59	59	56	66
	5460	63	65	66	65	65	63	63	57	70
	7800	67	66	67	68	68	67	67	59	73
600 x 400	1050	60	59	55	55	55	56	56	53	63
	4200	63	62	60	59	58	60	60	57	67
	7350	63	65	66	65	65	63	63	57	70
	10500	68	67	68	69	69	68	68	60	74
600 x 500	1300	64	63	59	59	59	60	60	57	67
	5200	67	66	64	63	62	64	64	61	71
	9100	66	68	69	68	68	66	66	60	73
	13000	71	70	71	72	72	71	71	63	77
600 x 600	160	63	62	58	58	58	59	59	56	66
	5440	66	65	63	62	61	63	63	60	70
	10720	67	69	70	69	69	67	67	61	74
	16000	72	71	72	73	73	72	72	64	78
700 x 200	600	59	58	54	54	54	55	55	52	62
	2400	62	61	59	58	57	59	59	56	66
	4200	62	64	65	64	64	62	62	56	69
	6000	66	65	66	67	67	66	66	58	72
700 x 300	900	60	59	55	55	55	56	56	53	63
	3600	63	62	60	59	58	60	60	57	67
	6300	63	65	66	65	65	63	63	57	70
	9000	68	67	68	69	69	68	68	60	74
700 x 400	1200	61	60	56	56	56	57	57	54	64
	4800	64	63	61	60	59	61	61	58	68
	8400	64	66	67	66	66	64	64	58	71
	12000	70	69	70	71	71	70	70	62	76
700 x 500	1500	64	63	59	59	59	60	60	57	67
	6000	67	66	64	63	62	64	64	61	71
	10500	67	69	70	69	69	67	67	61	74
	15000	73	72	73	74	74	73	73	65	79
800 x 200	700	59	58	54	54	54	55	55	52	62
	2800	62	61	58	58	58	59	59	56	66
	4900	62	64	61	61	61	62	62	56	69
	7000	66	65	64	64	64	65	65	58	72
800 x 300	1050	61	60	56	56	56	57	57	54	64
	4200	63	62	60	59	58	60	60	57	67
	7350	63	65	66	65	65	63	63	57	70
	10500	68	67	68	69	69	68	68	60	74

Δp_{st} = 250 Pa										
Size	$\dot{V}$ [m³/h]	L_W [dB/Okt]								L_{WA} [dB(A)]
		f_m [Hz]								
		63	125	250	500	1000	2000	4000	8000	
800 x 400	1400	61	60	56	56	56	57	57	54	64
	5600	64	63	61	60	59	61	61	58	68
	9800	67	69	70	69	69	67	67	61	74
	14000	70	69	70	71	71	70	70	62	76
800 x 500	1750	65	64	60	60	60	61	61	58	68
	7000	68	67	65	64	63	65	65	62	72
	12250	68	70	71	70	70	68	68	62	75
	17500	73	72	73	74	74	73	73	65	79
800 x 600	2100	66	65	61	61	61	62	62	59	69
	8400	69	68	66	65	64	66	66	63	73
	14700	68	70	71	70	70	68	68	62	75
	21000	74	73	74	75	75	74	74	66	80
800 x 800	2800	65	64	60	60	60	61	61	58	68
	11200	69	68	66	65	64	66	66	63	73
	19600	70	72	73	72	72	70	70	64	77
	28000	76	75	76	77	77	76	76	68	82
900 x 300	1200	63	62	58	58	58	59	59	56	66
	4800	66	65	63	62	61	63	63	60	70
	8400	66	68	69	68	68	66	66	60	73
	12000	70	69	70	71	71	70	70	62	76
900 x 400	1600	64	63	59	59	59	60	60	57	67
	6400	67	66	64	63	62	64	64	61	71
	11200	67	69	70	69	69	67	67	61	74
	16000	72	71	72	73	73	72	72	64	78
900 x 500	2000	65	64	60	60	60	61	61	58	68
	8000	68	67	65	64	63	65	65	62	72
	14000	68	70	71	70	70	68	68	62	75
	20000	74	73	74	75	75	74	74	66	80
1000 x 300	1300	64	63	59	59	59	60	60	57	67
	5200	67	66	64	63	62	64	64	61	71
	9100	67	69	70	69	69	67	67	61	74
	13000	72	71	72	73	73	72	72	64	78
1000 x 400	1750	64	63	59	59	59	60	60	57	67
	7000	67	66	64	63	62	64	64	61	71
	12250	68	70	71	70	70	68	68	62	75
	17500	73	72	73	74	74	73	73	65	79
1000 x 500	2200	60	59	55	55	55	56	56	53	63
	8800	68	67	65	64	63	65	65	62	72
	15400	69	71	72	71	71	69	69	63	76
	22000	74	73	74	75	75	74	74	66	80
1000 x 600	2600	65	64	60	60	60	61	61	58	68
	10400	69	68	66	65	64	66	66	63	73
	18200	69	71	72	71	71	69	69	63	76
	26000	75	74	75	76	76	75	75	67	81
1000 x 800	3500	66	65	61	61	61	62	62	59	69
	14000	70	69	67	66	65	67	67	64	74
	24500	71	73	74	73	73	71	71	65	78
	35000	77	76	77	78	78	77	77	69	83
1000 x 1000	4300	67	66	62	62	62	63	63	60	70
	17200	71	70	68	67	66	68	68	65	75
	30100	71	73	74	73	73	71	71	65	78
	43000	77	76	77	78	78	77	77	69	83

Tab. 8.1.4.

Size	$\dot{V}$ [m³/h]	L_W [dB/Okt] f_m [Hz] 63	125	250	500	1000	2000	4000	8000	L_{WA} [dB(A)]
Δp_{st} = 500 Pa										
200 x 100	90	61	60	56	56	56	57	60	54	64
	360	65	64	62	61	60	62	64	59	69
	630	64	66	67	66	66	64	66	58	71
	900	72	71	72	73	73	72	71	64	78
200 x 200	180	61	60	56	56	56	57	57	54	64
	720	66	65	63	62	61	63	63	60	70
	1260	66	68	69	68	68	66	66	60	73
	1800	70	69	70	71	71	70	70	62	76
300 x 100	130	61	60	56	56	56	57	57	54	64
	520	65	64	62	61	60	62	62	59	69
	910	65	67	68	67	67	65	65	59	72
	1300	69	68	69	70	70	69	69	61	75
300 x 200	260	62	61	57	57	57	58	58	55	65
	1040	67	66	64	63	62	64	64	61	71
	1820	67	69	70	69	69	67	67	61	74
	2600	71	70	71	72	72	71	71	63	77
300 x 300	390	63	62	58	58	58	59	59	56	66
	1560	67	66	64	63	62	64	64	61	71
	2730	68	70	71	70	70	68	68	62	75
	3900	72	71	72	73	73	72	72	64	78
400 x 100	180	62	61	57	57	57	58	58	55	65
	720	66	65	63	62	61	63	63	60	70
	1260	66	68	69	68	68	66	66	60	73
	1800	70	69	70	71	71	70	70	62	76
400 x 200	350	63	62	58	58	58	59	59	56	66
	1400	68	67	65	64	63	65	65	62	72
	2450	68	70	71	70	70	68	68	62	75
	3500	72	71	72	73	73	72	72	64	78
400 x 300	520	65	64	60	60	60	61	61	58	68
	2080	69	68	66	65	64	66	66	63	73
	3640	69	71	72	71	71	69	69	63	76
	5200	73	72	73	74	74	73	73	65	79
400 x 400	700	66	65	61	61	61	62	62	59	69
	2800	70	69	67	66	65	67	67	64	74
	4900	69	71	72	71	71	69	69	63	76
	7000	75	74	75	76	76	75	75	67	81
500 x 100	220	63	62	58	58	58	59	59	56	66
	880	67	66	64	63	62	64	64	61	71
	1540	67	69	70	69	69	67	67	61	74
	2200	70	69	70	71	71	70	70	62	76
500 x 200	440	63	62	58	58	58	59	59	56	66
	1760	68	67	65	64	63	65	65	62	72
	3080	69	71	72	71	71	69	69	63	76
	4400	72	71	72	73	73	72	72	64	78
500 x 300	650	65	64	60	60	60	61	61	58	68
	2600	70	69	67	66	65	67	67	64	74
	4550	69	71	72	71	71	69	69	63	76
	6500	74	73	74	75	75	74	74	66	80
500 x 400	870	67	66	62	62	62	63	63	60	70
	3480	71	70	68	67	66	68	68	65	75
	6090	70	72	73	72	72	70	70	64	77
	8700	76	75	76	77	77	76	76	68	82

Δp_{st} = 500 Pa										
Size	$\dot{V}$ [m³/h]	L_W [dB/Okt]								L_{WA} [dB(A)]
		f_m [Hz]								
		63	125	250	500	1000	2000	4000	8000	
500 x 500	1100	70	69	65	65	65	66	66	63	73
	4400	73	72	70	69	68	70	70	67	77
	7700	73	75	76	75	75	73	73	67	80
	11000	79	78	79	80	80	79	79	71	85
600 x 100	260	63	62	58	58	58	59	59	56	66
	1040	67	66	64	63	62	64	64	61	71
	1820	67	69	70	69	69	67	67	61	74
	2600	71	70	71	72	72	71	71	63	77
600 x 200	520	65	64	60	60	60	61	61	58	68
	2080	69	68	66	65	64	66	66	63	73
	3640	69	71	72	71	71	69	69	63	76
	5200	74	73	74	75	75	74	74	66	80
600 x 300	780	66	65	61	61	61	62	62	59	69
	3120	70	69	67	66	65	67	67	64	74
	5460	70	72	73	72	72	70	70	64	77
	7800	75	74	75	76	76	75	75	67	81
600 x 400	1050	68	67	63	63	63	64	64	61	71
	4200	71	70	68	67	66	68	68	65	75
	7350	71	73	74	73	73	71	71	65	78
	10500	77	76	77	78	78	77	77	69	83
600 x 500	1300	71	70	66	66	66	67	67	64	74
	5200	74	73	71	70	69	71	71	68	78
	9100	74	76	77	76	76	74	74	68	81
	13000	80	79	80	81	81	80	80	72	86
600 x 600	160	70	69	65	65	65	66	66	63	73
	5440	74	73	71	70	69	71	71	68	78
	10720	74	76	77	76	76	74	74	68	81
	16000	81	80	81	82	82	81	81	73	87
700 x 200	600	66	65	61	61	61	62	62	59	69
	2400	70	69	67	66	65	67	67	64	74
	4200	69	71	72	71	71	69	69	63	76
	6000	74	73	74	75	75	74	74	66	80
700 x 300	900	67	66	62	62	62	63	63	60	70
	3600	70	69	66	66	66	67	67	64	74
	6300	70	72	73	72	72	70	70	64	77
	9000	76	75	76	77	77	76	76	68	82
700 x 400	1200	68	67	63	63	63	64	64	61	71
	4800	72	71	69	68	67	69	69	66	76
	8400	72	74	75	74	74	72	72	66	79
	12000	78	77	78	79	79	78	78	70	84
700 x 500	1500	71	70	66	66	66	67	67	64	74
	6000	75	74	72	71	70	72	72	69	79
	10500	74	76	77	76	76	74	74	68	81
	15000	81	80	81	82	82	81	81	73	87
800 x 200	700	67	66	62	62	62	63	63	60	70
	2800	70	69	67	66	65	67	67	64	74
	4900	70	72	73	72	72	70	70	64	77
	7000	75	74	75	76	76	75	75	67	81
800 x 300	1050	68	67	63	63	63	64	64	61	71
	4200	71	71	67	67	67	68	68	65	75
	7350	71	73	74	73	73	71	71	65	78
	10500	77	76	77	78	78	77	77	69	83

Size	$\dot{V}$ [m³/h]	L_W [dB/Okt] f_m [Hz] 63	125	250	500	1000	2000	4000	8000	L_{WA} [dB(A)]
Δp_{st} = 500 Pa										
800 x 400	1400	68	67	63	63	63	64	64	61	71
	5600	72	71	69	68	67	69	69	66	76
	9800	72	74	72	71	70	72	72	69	79
	14000	79	78	79	80	80	79	79	71	85
800 x 500	1750	72	71	67	67	67	68	68	65	75
	7000	75	74	72	71	70	72	72	69	79
	12250	76	78	79	78	78	76	76	70	83
	17500	83	82	83	84	84	83	83	75	89
800 x 600	2100	72	71	67	67	67	68	68	65	75
	8400	76	75	73	72	71	73	73	70	80
	14700	77	79	80	79	79	77	77	71	84
	21000	84	83	84	85	85	84	84	76	90
800 x 800	2800	73	72	68	68	68	69	69	66	76
	11200	77	76	74	73	72	74	74	71	81
	19600	79	81	82	81	81	79	79	73	86
	28000	87	86	87	88	88	87	87	79	93
900 x 300	1200	70	69	65	65	65	66	66	63	73
	4800	74	73	71	70	69	71	71	68	78
	8400	74	76	77	76	76	74	74	68	81
	12000	80	79	80	81	81	80	80	72	86
900 x 400	1600	75	74	70	70	70	71	71	68	78
	6400	75	74	72	71	70	72	72	69	79
	11200	75	77	78	77	77	75	75	69	82
	16000	82	81	82	83	83	82	82	74	88
900 x 500	2000	72	71	67	67	67	68	68	65	75
	8000	76	75	73	72	71	73	73	70	80
	14000	76	78	79	78	78	76	76	70	83
	20000	83	82	83	84	84	83	83	75	89
1000 x 300	1300	70	69	65	65	65	66	66	63	73
	5200	74	73	71	70	69	71	71	68	78
	9100	73	75	76	75	75	73	73	67	80
	13000	79	78	79	80	80	79	79	71	85
1000 x 400	1750	71	70	66	66	66	67	67	64	74
	7000	75	74	72	71	70	72	72	69	79
	12250	75	77	78	77	77	75	75	69	82
	17500	82	81	82	83	83	82	82	74	88
1000 x 500	2200	72	71	67	67	67	68	68	65	75
	8800	76	75	73	72	71	73	73	70	80
	15400	77	79	80	79	79	77	77	71	84
	22000	84	83	84	85	85	84	84	76	90
1000 x 600	2600	73	72	68	68	68	69	69	66	76
	10400	77	76	74	73	72	74	74	71	81
	18200	77	79	80	79	79	77	77	71	84
	26000	85	84	85	86	86	85	85	77	91
1000 x 800	3500	74	73	69	69	69	70	70	67	77
	14000	78	77	75	74	73	75	75	72	82
	24500	80	82	83	82	82	80	80	74	87
	35000	88	87	88	89	89	88	88	80	94
1000 x 1000	4300	75	74	70	70	70	71	71	68	78
	17200	79	78	76	75	74	76	76	73	83
	30100	80	82	83	82	82	80	80	74	87
	43000	89	88	89	90	90	89	89	81	95

8.2. Radiated noise

The radiated noise of air volume controller is listed in Tab. 8.2.1.

$\mathring{V}$ [m³.h⁻¹] - air flow volume

Δp_{st} [Pa] - pressure differential

L_{WA} [dB(A)] - total level of acoustic power corrected by filter A

Tab. 8.2.1.

Size	$\mathring{V}$ [m³/h]	L_{WA} [dB(A)]	L_{WA} [dB(A)]	L_{WA} [dB(A)]	L_{WA} [dB(A)]
		Δp_{st} = 50 Pa	Δp_{st} = 100 Pa	Δp_{st} = 250 Pa	Δp_{st} = 500 Pa
200 x 100	90	35	39	43	48
	360	37	42	47	53
	630	42	47	52	58
	900	45	49	55	62
200 x 200	180	40	42	47	49
	720	40	44	49	54
	1260	44	48	52	57
	1800	48	52	55	61
300 x 100	130	37	40	46	50
	520	38	42	49	55
	910	43	47	54	59
	1300	48	52	58	63
300 x 200	260	38	41	47	52
	1040	39	44	51	57
	1820	44	49	56	61
	2600	49	53	60	64
300 x 300	390	39	42	49	54
	1560	40	45	52	58
	2730	45	50	57	63
	3900	52	56	63	68
400 x 100	180	39	42	47	50
	720	40	44	50	54
	1260	44	48	52	57
	1800	49	52	58	61
400 x 200	350	39	43	50	55
	1400	41	46	53	60
	2450	45	50	57	63
	3500	49	54	60	66
400 x 300	520	38	42	50	55
	2080	40	45	53	59
	3640	46	51	58	64
	5200	52	56	63	68
400 x 400	700	39	43	51	56
	2800	42	47	54	61
	4900	47	52	59	65
	7000	53	57	63	69
500 x 100	220	39	42	48	52
	880	39	44	51	57
	1540	44	49	55	61
	2200	48	52	58	63
500 x 200	440	40	43	50	55
	1760	41	46	53	59
	3080	46	51	57	64
	4400	50	55	60	66

Size	$\dot{V}$ [m³/h]	L_{WA} [dB(A)]	L_{WA} [dB(A)]	L_{WA} [dB(A)]	L_{WA} [dB(A)]
		Δp_{st} = 50 Pa	Δp_{st} = 100 Pa	Δp_{st} = 250 Pa	Δp_{st} = 500 Pa
500 x 300	650	41	44	52	57
	2600	43	47	55	61
	4550	47	52	59	65
	6500	52	56	62	69
500 x 400	870	40	44	52	57
	3480	43	48	55	61
	6090	47	52	60	66
	8700	53	58	63	70
500 x 500	1100	42	46	54	58
	4400	46	51	57	64
	7700	51	56	62	70
	11000	57	62	67	76
600 x 100	260	38	41	47	51
	1040	39	44	51	55
	1820	44	49	56	58
	2600	48	53	59	61
600 x 200	520	39	42	50	55
	2080	40	45	53	60
	3640	46	51	58	64
	5200	52	56	62	69
600 x 300	780	39	43	51	57
	3120	41	46	54	60
	5460	46	51	59	65
	7800	52	57	63	70
600 x 400	1050	40	44	52	59
	4200	44	48	56	63
	7350	49	54	61	68
	10500	54	59	64	72
600 x 500	1300	41	45	53	59
	5200	45	50	58	65
	9100	53	58	63	71
	13000	62	67	68	78
600 x 600	160	42	46	53	59
	5440	47	52	58	65
	10720	53	58	64	72
	16000	62	68	68	79
700 x 200	600	37	42	47	56
	2400	41	46	53	60
	4200	46	51	58	65
	6000	52	56	62	68
700 x 300	900	40	44	51	57
	3600	42	47	55	61
	6300	47	52	60	66
	9000	52	57	63	70
700 x 400	1200	41	45	53	59
	4800	44	49	56	64
	8400	49	54	61	68
	12000	54	59	65	73
700 x 500	1500	42	46	53	60
	6000	47	52	59	66
	10500	53	58	64	72
	15000	63	68	71	79
800 x 200	700	39	43	51	57
	2800	42	47	54	61
	4900	47	52	59	66
	7000	52	57	62	70

Size	$\dot{V}$ [m³/h]	L_{WA} [dB(A)]	L_{WA} [dB(A)]	L_{WA} [dB(A)]	L_{WA} [dB(A)]
		Δp_{st} = 50 Pa	Δp_{st} = 100 Pa	Δp_{st} = 250 Pa	Δp_{st} = 500 Pa
800 x 300	1050	40	44	52	59
	4200	44	48	56	63
	7350	49	54	61	68
	10500	54	59	64	73
800 x 400	1400	39	44	53	60
	5600	44	49	57	64
	9800	49	54	62	69
	14000	53	60	63	74
800 x 500	1750	42	46	55	61
	7000	48	53	59	67
	12250	53	59	64	73
	17500	62	69	70	82
800 x 600	2100	43	47	56	62
	8400	49	54	60	68
	14700	54	60	65	75
	21000	64	70	72	84
800 x 800	2800	43	48	55	62
	11200	50	55	62	71
	19600	56	62	67	77
	28000	68	74	75	88
900 x 300	1200	43	47	53	59
	4800	47	52	58	65
	8400	53	58	63	71
	12000	62	66	71	78
900 x 400	1600	49	47	53	60
	6400	48	53	59	67
	11200	54	59	64	73
	16000	63	68	72	81
900 x 500	2000	43	48	54	62
	8000	49	54	60	69
	14000	54	60	65	74
	20000	65	70	74	83
1000 x 300	1300	43	47	53	59
	5200	47	52	58	65
	9100	52	57	63	70
	13000	63	67	70	77
1000 x 400	1750	42	47	53	60
	7000	48	53	59	67
	12250	55	60	65	73
	17500	65	70	73	80
1000 x 500	2200	42	47	54	61
	8800	49	54	61	68
	15400	55	60	66	74
	22000	66	71	76	84
1000 x 600	2600	43	48	54	62
	10400	50	55	61	69
	18200	55	61	66	75
	26000	67	72	76	86
1000 x 800	3500	44	49	56	63
	14000	51	56	63	72
	24500	57	63	68	78
	35000	69	75	78	89
1000 x 1000	4300	44	49	57	65
	17200	52	57	64	73
	30100	57	63	69	79
	43000	68	74	78	91

8.3. Radiated noise - controller with insulation

The radiated noise of air volume controller is listed in Tab. 8.3.1.

$\dot{V}$ [m³.h⁻¹] - air flow volume

Δp_{st} [Pa] - pressure differential

L_{WA} [dB(A)] - total level of acoustic power corrected by filter A

Tab. 8.3.1.

Size	$\dot{V}$ [m³/h]	L_{WA} [dB(A)]	L_{WA} [dB(A)]	L_{WA} [dB(A)]	L_{WA} [dB(A)]
		Δp_{st} = 50 Pa	Δp_{st} = 100 Pa	Δp_{st} = 250 Pa	Δp_{st} = 500 Pa
200 x 100	90	29	32	34	39
	360	30	34	37	43
	630	37	41	44	49
	900	40	43	47	52
200 x 200	180	33	35	40	40
	720	34	37	42	44
	1260	39	43	44	50
	1800	42	46	47	53
300 x 100	130	30	33	37	41
	520	30	34	39	44
	910	38	41	46	51
	1300	41	45	49	54
300 x 200	260	31	34	39	43
	1040	32	36	41	47
	1820	39	43	48	54
	2600	42	46	52	56
300 x 300	390	33	36	41	45
	1560	34	38	43	49
	2730	41	45	50	56
	3900	46	50	55	60
400 x 100	180	31	34	36	41
	720	32	36	38	44
	1260	38	42	45	50
	1800	43	46	50	52
400 x 200	350	33	36	41	45
	1400	34	38	44	49
	2450	41	45	50	55
	3500	44	48	52	58
400 x 300	520	32	36	42	46
	2080	34	38	45	50
	3640	41	45	51	56
	5200	47	50	56	60
400 x 400	700	33	36	43	48
	2800	35	39	46	51
	4900	43	47	52	58
	7000	47	51	56	61
500 x 100	220	31	34	39	43
	880	33	37	42	46
	1540	39	43	48	53
	2200	42	46	50	55
500 x 200	440	33	36	42	46
	1760	34	38	44	49
	3080	39	43	50	56
	4400	43	47	52	58

Size	$\dot{V}$ [m³/h]	L_{WA} [dB(A)]	L_{WA} [dB(A)]	L_{WA} [dB(A)]	L_{WA} [dB(A)]
		Δp_{st} = 50 Pa	Δp_{st} = 100 Pa	Δp_{st} = 250 Pa	Δp_{st} = 500 Pa
500 x 300	650	34	37	44	48
	2600	36	40	46	51
	4550	42	46	52	57
	6500	46	50	55	60
500 x 400	870	35	38	45	48
	3480	37	41	47	52
	6090	43	47	53	58
	8700	48	52	56	63
500 x 500	1100	37	40	46	50
	4400	40	44	49	55
	7700	46	50	56	62
	11000	52	56	60	68
600 x 100	260	31	34	39	42
	1040	32	36	42	45
	1820	39	43	48	51
	2600	42	46	51	54
600 x 200	520	33	36	42	46
	2080	34	38	44	50
	3640	41	45	51	57
	5200	46	50	55	61
600 x 300	780	34	37	43	48
	3120	36	40	46	51
	5460	42	46	52	58
	7800	47	51	56	62
600 x 400	1050	34	38	44	50
	4200	37	41	48	53
	7350	44	48	54	60
	10500	48	53	57	65
600 x 500	1300	36	39	46	51
	5200	40	44	50	56
	9100	48	52	56	63
	13000	56	60	63	70
600 x 600	160	36	40	45	50
	5440	40	45	49	56
	10720	49	53	57	64
	16000	57	61	64	71
700 x 200	600	32	36	40	47
	2400	35	39	45	50
	4200	42	46	52	57
	6000	46	50	55	61
700 x 300	900	35	38	44	49
	3600	37	41	47	52
	6300	43	47	53	59
	9000	48	52	57	62
700 x 400	1200	35	39	45	51
	4800	38	42	48	54
	8400	43	48	54	61
	12000	50	54	58	66
700 x 500	1500	37	40	46	52
	6000	41	46	50	57
	10500	49	53	57	64
	15000	58	62	64	71
800 x 200	700	32	36	43	48
	2800	35	39	46	51
	4900	43	47	52	58
	7000	47	51	55	62

Size	$\dot{V}$ [m³/h]	L_{WA} [dB(A)]	L_{WA} [dB(A)]	L_{WA} [dB(A)]	L_{WA} [dB(A)]
		Δp_{st} = 50 Pa	Δp_{st} = 100 Pa	Δp_{st} = 250 Pa	Δp_{st} = 500 Pa
800 x 300	1050	35	38	45	50
	4200	37	41	48	54
	7350	43	48	53	61
	10500	49	53	58	65
800 x 400	1400	34	38	46	52
	5600	38	42	49	55
	9800	44	49	55	62
	14000	49	54	59	66
800 x 500	1750	36	40	47	53
	7000	41	46	51	58
	12250	49	54	58	66
	17500	58	63	65	73
800 x 600	2100	37	41	48	54
	8400	42	47	52	60
	14700	50	55	59	67
	21000	59	64	67	75
800 x 800	2800	37	42	48	55
	11200	43	48	54	62
	19600	52	57	61	70
	28000	62	67	70	79
900 x 300	1200	37	41	45	51
	4800	41	45	50	56
	8400	49	53	56	63
	12000	56	60	63	70
900 x 400	1600	37	41	46	52
	6400	41	46	51	58
	11200	49	54	58	65
	16000	57	62	65	72
900 x 500	2000	38	42	47	54
	8000	43	48	52	60
	14000	50	55	59	67
	20000	59	64	67	74
1000 x 300	1300	37	40	46	50
	5200	41	45	50	56
	9100	48	52	57	63
	13000	56	60	62	69
1000 x 400	1750	37	41	46	52
	7000	42	46	52	58
	12250	49	54	58	65
	17500	60	64	66	72
1000 x 500	2200	37	41	47	53
	8800	43	47	53	59
	15400	50	55	60	67
	22000	60	65	67	75
1000 x 600	2600	38	42	48	54
	10400	44	48	54	61
	18200	50	55	60	67
	26000	62	66	68	77
1000 x 800	3500	39	43	49	56
	14000	45	50	55	63
	24500	53	58	62	71
	35000	63	68	70	80
1000 x 1000	4300	39	43	50	57
	17200	46	51	56	65
	30100	59	64	65	72
	43000	71	75	76	82

IV. VENTILATION SYSTEMS

9. Ventilation systems with controllers RPMC-V

9.1. Flow control in the room using the Belimo wall-mounted device

Fig. 35 Device P-01RT-1x-0

Fig. 36 Device 22Rx-xx-x

Tab. 9.1.1.

Wall device	**22RT-19-1**	**22RTM-19-1**	**P-01RT-1x-0**
Measurement	Temperature	Temperature, relative humidity, Dew point, CO_2	Temperature
Resetting values	PC BelimoAssistent NFC	PC BelimoAssistent NFC	Rotary wheel
Power voltage	AC 24V, +-20%, 0.5W DC 24V, +- 20%, 1VA		
Connections	spring terminal block 0,25 ... 1,5 mm		
Output	control signal Y: 0 ... 10V, max. 1 mA		
Degree of protection	IP 30		
Protection class	III (Safety extra-low voltage)		
Temperature / ambient humidity	0...+50 °C / 20 ... Max 95% r.H. (non-condensing)		
Temperature / storage humidity	-20...+70 °C / 20 ... Max 95% r.H. (non-condensing)		

More sensor designs and information in the Belimo catalog.

9.2. Ventilation systems HRSM, HRSM-K

Description

Mandík VAV regulating systems HRSM and HRSM-K are designed for simple and optimal regulation of air quality in family houses, apartments (including kitchen exhaust), office buildings with conference rooms or industrial premises with centralized ventilation systems.

The air regulating systems HRSM/ HRSM-K are designed as “demand-based control systems”.
The VAV dampers are not depending on air pressure in the duct.
They can be used also as constant flow regulating dampers, when needed.
The HRSM/ HRSM-K systems are operated by electrical boxes DC1/respectively DC2 and controlled by 3 positions wall switch.

The HRSM-K is connectable to kitchen hood exhaust, which is equipped with micro switch.
The HRSM-K (“kitchen”) allows to increase air volume in the supply ducts and consequently to decreases air volume in the exhaust ducts, when kitchen hood is in operation.
It means that the kitchen hood is extracting the air with its own fan.

Switch positions:
- Damper´s blade in closed position
- Minimal air flow volume position
- Maximal air flow volume position

Fig. 37 HRSM, HRSM-K

Fig. 38 Wiring diagram HRSM

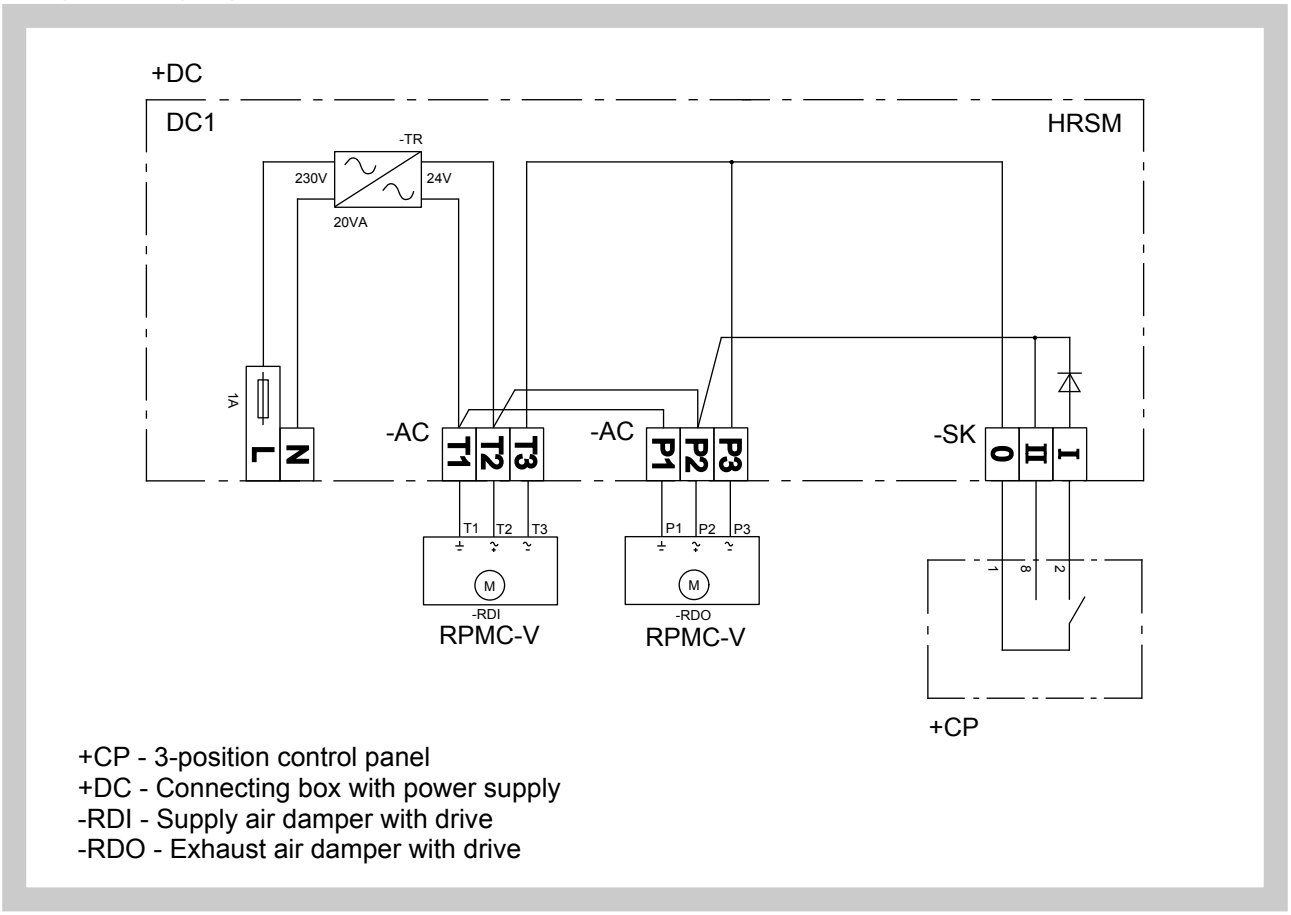

Fig. 39 Wiring diagram HRSM-K

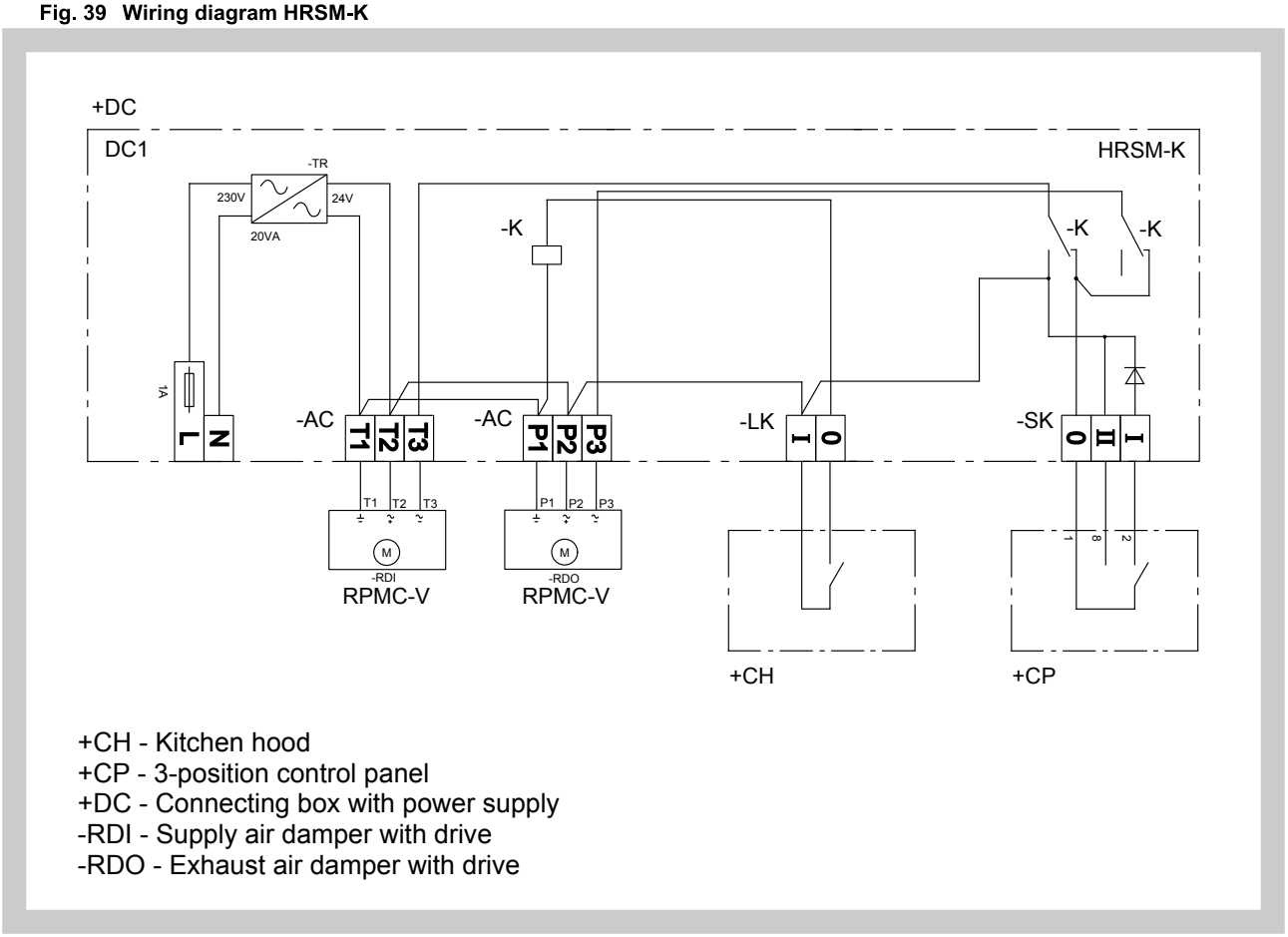

V. MATERIAL, FINISHING

10. Material

10.1. The body of the controller and the controller blade are made of galvanized sheet. The blade is furnished with a silicon seal along its periphery. The controller is delivered without further surface treatment.

10.2. According to the customer's requirements, damper can be made of stainless material.

Specifications for stainless-steel models – classification of stainless steel:

- Class A2 – Food-grade stainless steel (AISI 304 – EN 17240)
- Class A4 – Chemistry-grade stainless steel (AISI 316, 316L – EN 17346, 17349)

The indicated metal is used for all metal components of the damper except the servo drive and its adapters.

The following components, including the fasteners, are made from stainless steel at all times:

1) Damper body and all components permanently attached
2) Leaf pins, metal components of the leaf
3) Pressure sensors inside the damper
4) Controlling components outside the damper (levers, control levers, metal part of the pin or the entire pin)
5) Servo drive mount
6) Insulation sheeting, if the damper is insulated

Plastic, rubber and silicon components, sealants, servo drives, and end switches are identical for all material variants of the dampers.

Some fasteners and components are available in one class of stainless steel; the type will be used in all stainless-steel variants.

Any other requirements for the design shall be considered atypical and shall be addressed on an individual basis.

VI. INSPECTION, TESTING

11. Inspection, testing

11.1. The appliance is constructed and and preset by the manufacturer, its operation is dependent on proper installation and adjustment.

VII. TRANSPORTATION AND STORAGE

12. Logistic terms

12.1. Controllers are transported by box freight vehicles without direct weather impact, there must not occur any sharp shocks and ambient temperature must not exceed +40°C. Controllers must be protected against mechanic damages when transported and manipulated. During transportation, the controller blade must be in the "CLOSED" position.

12.2. Controllers are stored indoor in environment without any aggressive vapours, gases or dust. Indoor temperature must be in the range from -5°C to +40°C and maximum relative humidity 80%. Controllers must be protected against mechanic damages when transported and manipulated.

VIII. ASSEMBLY, ATTENDANCE, MAINTENANCE AND REVISIONS

13. Assembly and set up

13.1. All effective safety standards and directives must be observed during air flow controller assembly.

The assembly consists of installing the controller in the air distribution system and if required, connecting the actuating mechanism to the electric net.

13.2. The reset of values $\dot{V}_{min}$ a $\dot{V}_{max}$ factory settings can be done in the following ways.

Belimo device

Using the adjustment by service tool ZTH-EU, which is designed for all Belimo actuators with interface contain PP (MF, MP, LON, …). Connection to actuator via service socket. Actuators can be adjusted and controlled over Plug and Play drives.

Setting can be made with the setup and programming software PC-Tool, that can be installed on a standard PC. The PC is connected to the actuator via the service socket.

Use the Belimo Assistant App, an app available for Android smartphones from version 4.4 and for iPhone devices with iOS 9 or later. This app can only be used with a Belima device that has a built-in NFC interface.

The Iphone device requires a NFC converter ZIP-BT-NFC. This device can also be used for an Android device that does not support NFC.

Gruner device

Using the display on the actuator

Siemens device

Using the service tool AST20 (hand tool) or ACSP31 (PC tool to be used with ATS 22).

More detailed information on the stated adjustment methods is given in the catalog of the actuator / controller manufacturer (Belimo, Gruner, Siemens).

IX. ORDERING INFROMATION

14. Ordering key

14.1. Controller RPMC-V

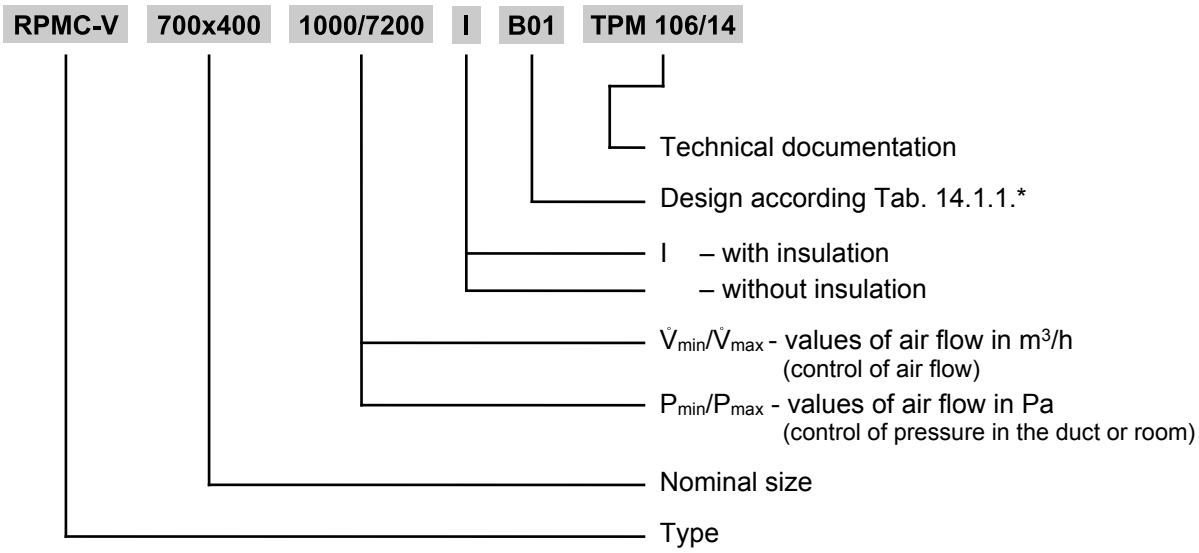

The standard operating mode is set for DC 2...10 V. If is it requested by customer, it can be set for DC 0...10 V.

The values of air volume $\mathring{V}_{min}$ and $\mathring{V}_{max}$ will be set by the manufacturer according to the customer's order. The pressure values P_{min} and P_{max} will be set according to the customer's order. If the customer does not determine the required values, the values will be set according to TPM resp. at pressure P_{min} to 0 Pa and P_{max} to the maximum value of the pressure sensor. These values can be subsequently reset by means of the instrument ZTH-EU, or by the PC software PC-Tool or via the Belimo Assistant App. For Gruner actuators, it is possible to additionally reset the values of $\mathring{V}_{min}$, $\mathring{V}_{max}$ and the operating mode using a display on the actuator.

*** You will find an extended overview of the design in the "Technical documentation" folder for the RPMC-V product at www.mandik.cz**

Tab. 14.1.1. Dampers design

Design list for variable airflow regulator- RPMC-V						Sensor range	Design
Air flow	BELIMO compact solution (sensor, controller and actuator in one box)	Without the sping	Dynamic	Analog MPBus	LMV-D3-MP (5 N.m, NMV-D3-MP 10 N.m, SMV-D3-MP 20 N.m)	0...500Pa	B01
				MODBUS BACnet MPBus	LMV-D3-MOD (5 N.m, NMV-D3-MOD 10 N.m, SMV-D3-MOD 20 N.m)	0...500Pa	B02
				LONMark	LMV-D3-LON (5 N.m, NMV-D3-LON 10 N.m)	0...500Pa	B03
				KNX	LMV-D3-KNX (5 N.m, NMV-D3-KNX 10 N.m)	0...500Pa	B04
	GRUNER compact solution (sensor, controller and actuator in one box)	Without the sping	Dynamic	Analog PP-Bus	327VM-024-05 (5 N.m, 327VM-024-10 10 N.m, 327VM-024-15 15 N.m.)	0…500 Pa	G00
				MODBUS RTU	327VM-024-05-MB (5 N.m, 327VM-024-10-MB 10 N.m, 327VM-024-15-MB 15 N.m.)	0…500 Pa	G02
	SIEMENS compact solution (sensor, controller and actuator in one box)	Without the sping	Dynamic	Analog PP-Bus	GDB181.1E/3 (5 N.m, (GLB181.1E/3 10 N.m)	0…500 Pa	S00
				MODBUS	GDB181.1E/MO (5 N.m, (GLB181.1E/MO 10 N.m)	0…500 Pa	S02
				KNX	GDB181.1E/KN (5 N.m, (GLB181.1E/KN 10 N.m)	0…500 Pa	S04
				BACnet	GDB181.1E/BA (5 N.m, (GLB181.1E/BA 10 N.m)	0…500 Pa	S05
Pressure	BELIMO sensor, controller and actuator all in separate boxes	Without the sping	Static	Analog MP-Bus	Controller VRU-M1-BAC (STP) + LM24A-VST (5 N.m., NM24A-VST 10 N.m, SM24A-VST 20 N.m)	0…600 Pa	B75
				ModBus BACnet	Controller VRU-M1-BAC (STP) + LM24A-VST (5 N.m., NM24A-VST 10 N.m, SM24A-VST 20 N.m)	0…600 Pa	B78
		With the spring	Static	Analog MP-Bus	Controller VRU-M1R-BAC (STP) + LF24-VST (4 N.m, NF24A-VST 10 N.m, SF24A-VST 20 N.m)	0…600 Pa	B75F
				ModBus BACnet	Controller VRU-M1R-BAC (STP) + LF24-VST (4 N.m, NF24A-VST 10 N.m, SF24A-VST 20 N.m)	0…600 Pa	B78F
		Speed actuator / With the spring	Static	Analog MP-Bus	Controller VRU-M1-BAC (STP) + LMQ24A-VST (4 N.m., NMQ24A-VST 8 N.m)	0…600 Pa	B75Q
				ModBus BACnet	Controller VRU-M1-BAC (STP) + LMQ24A-VST (4 N.m., NMQ24A-VST 8 N.m)	0…600 Pa	B78Q
	GRUNER compact solution (sensor, controller and actuator in one box)	Without the sping	Dynamic	Analog PP-Bus	327VM-024-05/CCOL (5 N.m, 327VM-024-10/CCOL 10 N.m, 327VM-024-15/CCOL 15 N.m.)	0…500 Pa	G50
				MODBUS RTU	327VM-024-05-DD15-MB/CCOL (5 N.m, 327VM-024-10-DD15-MB/CCOL 10 N.m, 327VM-024-15-DD15-MB/CCOL 15 N.m.)	0…1500 Pa	G52
	GRUNER sensor, controller and actuator all in separate boxes	Without the sping	Dynamic	Analog PP-Bus	Controller GUAC-DM3 + 227C-024-05-V/ST06 (5 N.m, 227C-024-10-V/ST06 10 N.m, 227C-024-15-V/ST06 15 N.m)	0…300 Pa	G62
				MODBUS RTU	Controller GUAC-DM3-PM + 227C-024-05-V/ST06 (5 N.m, 227C-024-10-V/ST06 10 N.m, 227C-024-15-V/ST06 15 N.m)	0…300 Pa	G64
			Static	Analog PP-Bus	Controller GUAC-PM1 + 227C-024-05-V/ST06 (5 N.m, 227C-024-10-V/ST06 10 N.m, 227C-024-15-V/ST06 15 N.m)	0…100 Pa	G70
					Controller GUAC-PM3 + 227C-024-05-V/ST06 (5 N.m, 227C-024-10-V/ST06 10 N.m, 227C-024-15-V/ST06 15 N.m)	0…300 Pa	G71
					Controller GUAC-PM6 + 227C-024-05-V/ST06 (5 N.m, 227C-024-10-V/ST06 10 N.m, 227C-024-15-V/ST06 15 N.m)	0…600 Pa	G72
				MODBUS RTU	Controller GUAC-PM1-MB + 227C-024-05-V/ST06 (5 N.m, 227C-024-10-V/ST06 10 N.m, 227C-024-15-V/ST06 15 N.m)	0…100 Pa	G76
					Controller GUAC-PM3-MB + 227C-024-05-V/ST06 (5 N.m, 227C-024-10-V/ST06 10 N.m, 227C-024-15-V/ST06 15 N.m)	0…300 Pa	G77
					Controller GUAC-PM6-MB + 227C-024-05-V/ST06 (5 N.m, 227C-024-10-V/ST06 10 N.m, 227C-024-15-V/ST06 15 N.m)	0…600 Pa	G78
		With the spring	Dynamic	Analog PP-Bus	Controller GUAC-DM3 + 341C-024-05-V/ST06 (5 N.m, 361C-024-10-V/ST06 10 N.m, 361C-024-20-V/ST06 20 N.m)	0…300 Pa	G62F
				MODBUS RTU	Controller GUAC-DM3-PM + 341C-024-05-V/ST06 (5 N.m, 361C-024-10-V/ST06 10 N.m, 361C-024-20-V/ST06 20 N.m)	0…300 Pa	G64F
			Static	Analog PP-Bus	Controller+pressure sensor GUAC-PM1 + 341C-024-05-V/ST06 (5 N.m, 361C-024-10-V/ST06 10 N.m, 361C-024-20-V/ST06 20 N.m)	0…100 Pa	G70F
					Controller+pressure sensor GUAC-PM3 + 341C-024-05-V/ST06 (5 N.m, 361C-024-10-V/ST06 10 N.m, 361C-024-20-V/ST06 20 N.m)	0…300 Pa	G71F
					Controller+pressure sensor GUAC-PM6 + 341C-024-05-V/ST06 (5 N.m, 361C-024-10-V/ST06 10 N.m, 361C-024-20-V/ST06 20 N.m)	0…600 Pa	G72F
				MODBUS RTU	Controller GUAC-PM1-MB + 341C-024-05-V/ST06 (5 N.m, 361C-024-10-V/ST06 10 N.m, 361C-024-20-V/ST06 20 N.m)	0…100 Pa	G76F
					Controller GUAC-PM3-MB + 341C-024-05-V/ST06 (5 N.m, 361C-024-10-V/ST06 10 N.m, 361C-024-20-V/ST06 20 N.m)	0…300 Pa	G77F
					Controller GUAC-PM6-MB + 341C-024-05-V/ST06 (5 N.m, 361C-024-10-V/ST06 10 N.m, 361C-024-20-V/ST06 20 N.m)	0…600 Pa	G78F
Pressure in the room	BELIMO sensor, controller and actuator all in separate boxes	Without the sping	Static	Analog MP-Bus	Controller VRU-M1R-BAC (STP) + LM24A-VST (5 N.m., NM24A-VST 10 N.m, SM24A-VST 20 N.m)	-75…+75	B91
				ModBus BACnet	Controller VRU-M1R-BAC (STP) + LM24A-VST (5 N.m., NM24A-VST 10 N.m, SM24A-VST 20 N.m)	-75…+75	B92
		With the spring	Static	Analog MP-Bus	Controller VRU-M1R-BAC (STP) + LF24-VST (4 N.m, NF24A-VST 10 N.m, SF24A-VST 20 N.m)	-75…+75	B91F
				ModBus BACnet	Controller VRU-M1R-BAC (STP) + LF24-VST (4 N.m, NF24A-VST 10 N.m, SF24A-VST 20 N.m)	-75…+75	B92F
		Speed actuator With the spring	Static	Analog MP-Bus	Controller VRU-M1-BAC (STP) + LMQ24A-VST (4 N.m., NMQ24A-VST 8 N.m)	-75…+75	B91Q
				ModBus BACnet	Controller VRU-M1-BAC (STP) + LMQ24A-VST (4 N.m., NMQ24A-VST 8 N.m)	-75…+75	B92Q

*** You will find an extended overview of the design in the "Technical documentation" folder for the RPMC-V product at www.mandik.cz**

14.2. Ventilation systems HRSM, HRSM-K

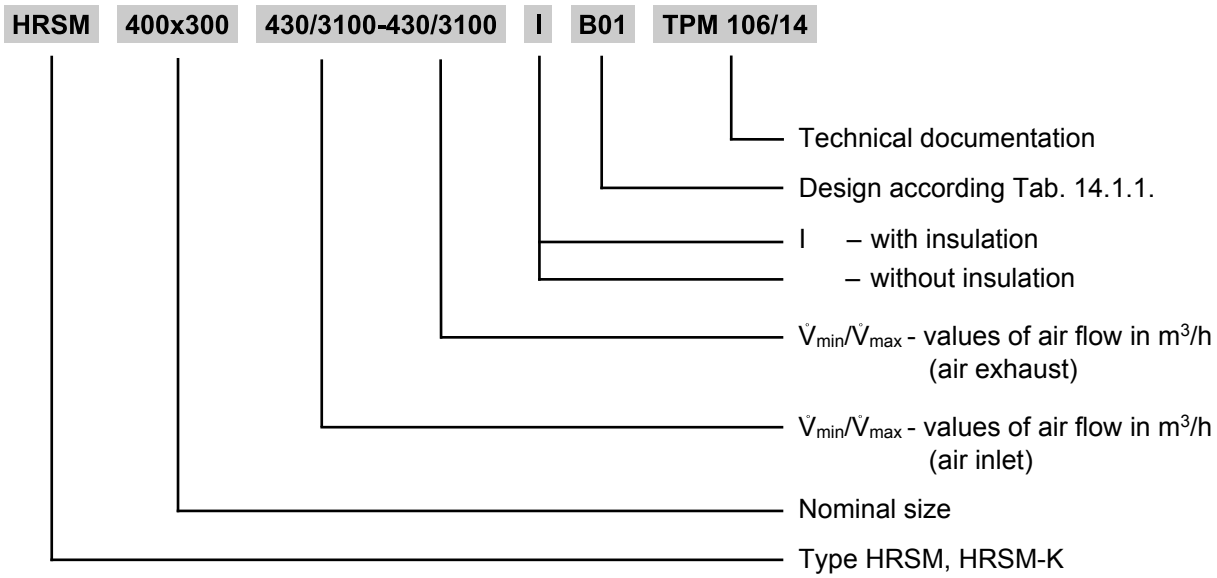

MANDÍK, a.s.
Dobříšská 550
26724 Hostomice
Czech Republic
Tel.: +420 311 706 706
E-Mail: mandik@mandik.cz
www.mandik.com

The producer reserves the right for innovations of the product. For actual product information see www.mandik.com